广东星光传动股份有限公司
GUANGDONG STARSHINE DRIVE CO., LTD.
广东省佛山市三水区白坭镇汇金工业城10号
ADD : NO.10,Huijin Industrial park, Baini Town,
Sanshui district,Foshan,Guangdong,China.
TEL: 400 850 5665 FAX:0757-66639837/838
E-MAIL:xg-sales@xgcd.cn HTTP://www.xgcd.cn

版号：XG-B-02-2021-A-1000

星光传动
STARSHINE DRIVE
动静之间 · 唯简不凡

B/JXJ系列摆线针轮减速机

B/JXJ SERIES CYCLOID GEAR REDUCER

公司简介 COMPANY PROFILE

广东星光传动股份有限公司前身是一家创建于1965年的国有军工企业——国营星光工模具厂，公司以“为用户提供高效传动系统解决方案，驱动工业更新！”为使命，打造世界一流企业，成为最受全球信赖和尊重得传动系统解决方案服务商。

公司技术力量雄厚，现有员工420余人，其中工程技术人员40多名，和各种先进的加工制造和检测设备，依托省级工程技术研究中心、减速机产品试验室和现代化研发和生产基地，为高端减变速机产品的行业应用开发和服务提供了良好的发展基础。

公司主导产品有：NCJ系列齿轮减速机、R/S/K/F系列高精度齿轮减速机、RV系列蜗杆减速器、SNP系列行星减速机、SNKG系列齿轮减速机、JWB-X系列机械无级变速器、B/JXJ系列摆线针轮减速机、XGK系列准双曲面齿轮减速机等八大系列产品可供选用，公司广泛服务于陶瓷、玻璃、木工、高压开关、食品饮料、包装印刷、仓储物流、起重运输等装备制造和应用行业，专为中高端用户提供专业的产品和服务。产品畅销国内，远销欧美、中东、东南亚等20多个国家和地区。

在未来的发展中，星光将承载“成就客户、勤劳朴实、自我批判、创新进取、诚实守信、团队合作”的职业信条，以“真实、利他，开发、创新，担当、协作”为核心价值观，聚焦客户需求，提供有竞争力的传动解决方案，持续为客户创造价值，打造高端装备制造业和终端用户“替代进口、升级换代”的首选品牌！

动静之间，唯简不凡；携手同行，星光灿烂！

Guangdong Starshine Drive Co.,Ltd，the predecessor was a state-owned military mould enterprise, was established in 1965. With the mission "Provide users with efficient transmission solutions and drive industrial reformation" Starshine devotes to be a world-class enterprise and becomes the most trusted and respected transmission solution provider in the world.

Starshine has a strong technical force with over 400 employees at present, including over 40 engineering technicians, and kinds of advanced processing machines and testing equipment. Thanks to the Provincial Engineering Technology Research Center, the speed reducer product laboratory, the modern R&D and production base, that make Starshine has a good foundation to develop and service for high-end speed reducers.

Our main products include: helical geared motor, worm gearboxes, planetary gearboxes, speed variators, cycloidal gearboxes, helical-hypoid gearboxes, which widely used in ceramic industry, glass industry, woodworking machinery , high voltage switch, food & beverage, packaging & printing, Storage & logistics, hoisting & transportation facilities…etc, Starshine technically provide the professional product & service for the medium and high-end customers, and our gearboxes are best-selling in both domestic and abroad market, such as Europe, North America, South America, Middle East, South Asia, Southeast Asia, Africa…etc more than 20 countries and regions.

In future, Starshine will hold the business creed of “serving customer, diligence & simplicity, self-criticism, innovation, honesty, teamwork”, and take “authenticity, altruism, openness, innovation, responsibility, collaboration” as core values. Focus on customers’ requirements and provide them the competitive transmission solution and create value for them constantly, and create a preferred brand of replacing import products and upgrading continuously for the end users.

Between Dynamic and Static, Simple is Extraordinary, let’s go forward hand in hand and make a brilliant future!

目　录 Content

产品简介 Introduction ---- 03
结构原理 Structural principle ---- 03
特点 Features ---- 04
B/JXJ系列摆线针轮减速机零件展开图 Structure ---- 05
型号表示方法 Model designations ---- 06
类型代号 Power source classification ---- 07
电机接线盒位置 Motor thermal box position ---- 07
安装型式及代号 Mounting position &code ---- 08
系列对照 Series comparison table ---- 09
选型指南 ---- 10
Guide for selection ---- 11
减速机的用途和负载性质分类 Application & load classification ---- 12
使用系数K K-service factor ---- 13
连接系数CF Connecting coefficient CF ---- 13
冲击系数FS Shock coefficient FS ---- 13
输出轴径向力位置系数 Lf Coefficient f or radial forceon output shaft ---- 14
双轴型摆线针轮减速机选型表 Selection table for donble shaft cycloidal pin wheel reducer ---- 15
外型尺寸 Outline dimension ---- 16
直联型摆线减速机选型步骤 ---- 20
Guidance of selection ---- 21
双轴型摆线减速机选型步骤 ---- 22
Guidance of selection ---- 23
单级直联型选型表 Selection table for single stage rdeucer ---- 24
双级直联型选型表 Selection table for double-stage re ducer ---- 29
摆线针轮减速机专用电机尺寸 Dimension specialized motor dimension for cycloid reduce ---- 31
普通电机法兰连接型法兰尺寸 Flang size for ordinary motor with flange ---- 32
电动机型号参数表 Motor coefficient tables ---- 33
润滑、使用与维护 Lubricant、vaage & maintainance ---- 34
摆线系列针轮减速机加油量 Flill oil quantity ---- 35
推荐用润滑油牌号 Lubricant brand recommended ---- 35
一般故障及排除方法 ---- 36
Failure and solutions ---- 37

B/JXJ系列摆线针轮减速机

B/JXJ SERIES CYCLOID GEAR REDUCER

产品简介
Introduction

星光B/JXJ系列摆线针轮减速机采用K-H-V少齿差行星式传动原理及摆线针齿啮合的新型传动结构。产品通过ISO9001质量体系认证，符合标准JB/T2982-94。

XingGuang B/JXJ series cycloid pin wheel reducer the principle of K-H-V planetary drive with small tooth difference and the new transmission structure of cycloid gear meshing with pin wheel.The product go through the ISO9001 quality system authentication,conforms to the standard of JB/T2982-94.

结构原理
Structural principle

摆线针轮减速机全部传动装置可分为三部分：输入部份、减速部份、输出部份。

输入轴上装有一个错位180° 的双偏心套，在偏心套上装有两个转臂滚柱轴承,形成H结构，两个摆线轮的中心孔即为偏心套转臂轴承的滚道，并由摆线轮与针齿轮上一组环形排列的针齿轮相啮合，以组成少齿差内啮合减速机构，（为了减少摩擦，在速比小的减速机中，针齿上带有针齿套）。

当输入轴带动偏心套转动一周时，由于摆线轮上齿廓曲线的特点及其受针齿轮上针齿限制之故,摆线轮的运动成为即有公转又有自转的平面运动,在输入轴正转一周时,偏心套亦转动一周,摆线轮于相反方向上转过一个齿差从而得到减速，再借助W输出机构，将摆线轮的低速自转运动通过销轴传递给输出轴，从而获得较低的输出转速。

Cycloid pin wheel reducer transmission device can be divided into three parts Input part, Slow part,Output part.

Input shaft is equippde with 180° dislocation of the double eccentic sets, eccentric set in with two iurn arm roller bearing,form H structure, two cycloid gear in the center hole that is set for eccentric turn of the bearing arms rolling way. and the cycloid gear and needle gear on one group of circular arrays of needle gear meshed , fewer tooth difference of internal meshing deceleration institutions, (in order to reduce ftiction,in small of the deceleration machine speed ratio,the needle on teeth with needle tooth set).

When the input shaft drive eccentric set of turning a circle,because the cycloid gear tooth profile curve of characteristics and needle gear teeth are the reason needle limit，the movement of cycloid gear that have become the revlution and the plane of rotation movement，In the input shaft are turning a circle，eccentroc set a circle also turn , cycloid in the opposite direction turned on a tooth difference and get a slow down , again with W output institutions , will cycloid gear of low speed rotation movement through the pin shaft pssed to the output shaft and get a low output speed.

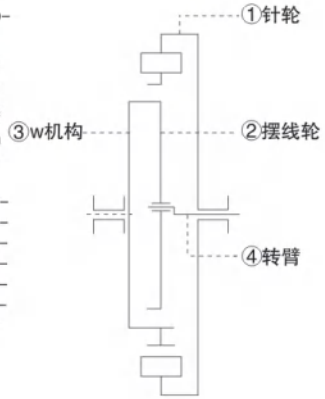

特点
Features

1. 传动比大

单级传动比为1/9~1/87；双级传动比1/99~1/7569;也可采用更多级组合。

2. 传动效率高

单级传动效率0.85，双级传动效率0.72。

3. 结构紧凑、体积小

采用行星传动原理，不仅输入轴与输出轴在同一轴线上，而且与电动机直联呈一体的独特之处，因此结构紧凑、体积小。

4. 运转平稳、噪声低

传动针齿多齿啮合，重叠系数大，具有机体平衡的原理，所以运转平稳可靠、噪声低。

5. 故障少、寿命长

主要传动件采用轴承钢，机械性能好，耐磨性能好，且传动件之间是滚动摩擦，故使之故障少、寿命长。

6. 过载能力强、耐冲击、惯性力矩少

适用于起动频繁和正反转的场合。

B/JXJ系列摆线针轮减速机广泛应用于陶瓷、食品、制药、塑料、轻工、纺织、矿冶、石化、起重运输、印染等领域中的驱动和减速装置。

1.The large singlegrade transmission ratio for transmission ratio 1/9~1/87;The two-stage transmission ratio of 1/99 to1/7569;Also can use more multilevel combination.
2.Of high transmission efficiency of single stage transmission efficiency 85%, The two-stage transmission efficiency 72%
3.Compact structure, small volume. not only the input shaft and the outpput shaft in the sane axis,and motor is a direct coupling and unique,so compact structure,small volume.
4.Smooth running,low noise transmissiongear tooth needle more engagement,overlapping factor is big,with the principle of balance,so smooth and reliable operation,low noise.
5.Low malfunction, long service life.The main driving parts are made of beaning steel, good mechanical properties, good wear resistance, and transmission parts quality inspection is the rolling friction, the fault so little, long life.
6.Strong overload ability ,impact resistance,the moment of inertia samall apply to start frequent and positive&negative occasion.

B/JXJ series cycloid reducer is widely usrd in ceramics, food, pharmaceuticals, plastics, light industry,textile, mining and metallurgy,petrochemical,lifting transportation,in the field of printing and dyeing drivers'device.

B/JXJ系列摆线针轮减速机零件展开图 Structure

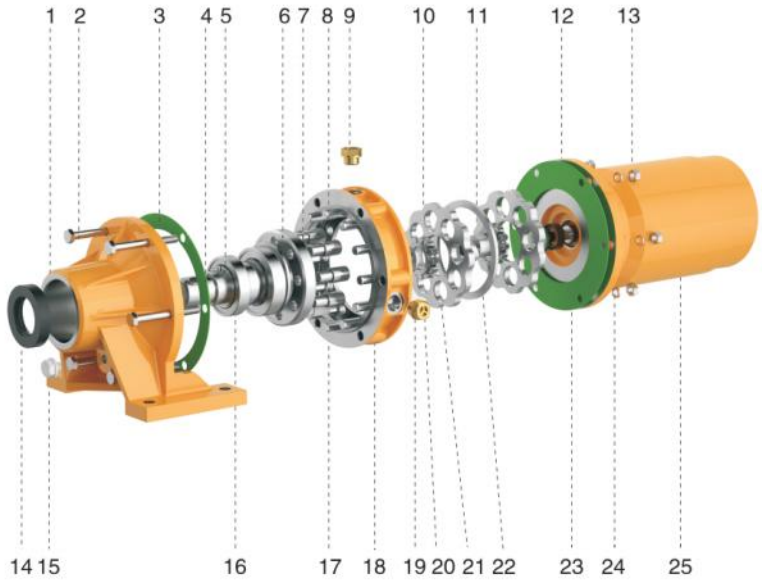

序号No.	名称 Description	序号No.	名称 Description
1	机座 Base	14	油封Oil seal
2	六角头螺栓 Hexagon bolt	15	六角头螺栓 Hexagon bolt
3	机座密封垫Base gasket	16	轴承Bearing
4	平键Flat key	17	销套Roller
5	轴用挡圈Circlip	18	针齿壳Pin wheel housing
6	输出轴Output shaft	19	偏心处轴套Eccentric shaft knots
7	销轴Pin	20	油镜Oil level plug
8	针齿销Gear pin	21	摆线轮Cycloid gear
9	通气油塞Oil breather	22	间隔环Partition ring
10	偏心轴承Eccentric bearing	23	电机轴轴套Motor shaft knots
11	偏心套Eccentric knots	24	弹垫Elastic ring
12	电机密封垫Montor gasket	25	直联电机Motor
13	螺母Nut		

型号表示方法 Model designation

减速机型号由减速机型号规格、电机代号、电机功率、电机极数、传动比、安装位置形式、附加接线盒等组合。
Slow maxhine from slowdown maxhine specifications,motor code,themotor power,motorextreme number,transmission atio, installation position position from, additional junction junction box etic.

B - W - E - D - 10 - 121 - 80B5 - 0.75 - 4P - B - 0°

系列代号 Series code
B
JXJ/XJ

安装结构Series code	
W	卧式底脚安装 JXJ/XJ系列省略 Thefoot type horizontal Installation JXJ/XJ series not marksd
L	立式法兰安装 Flange vertical installation

级数 Series	
单级 Single reducer	省略 Not marked
双级 Double-stageReducer	E

动力源配置类型 Power supply configuration types		
D	摆线专用电机 Cycloid special motor	
Y	带B5接口输入模块 with B5 connector input module	带B5国标接口电机 with B5 standard connector motor
		不带电机 without motor

传动比121 Transmission ratio

电机机座号 Motor base number
配电机时不标注 Distribution unit not marked

电机极数 Motor poles
2、4、6、8
4极省略 Not mark for 4pole motor default

线盒位置 Fuse position
0°、90°、180°
0°为正常位置不标注 0°fornormal position not marked

安装位置代号Installation position code	
B	B3、B5、B6、B7、B8、B9
V	V1、V3、V5、V6
B3、V1省略 B3、V1 Not marked	

电机功率 Motor power
未标注时为不配电机 Not when mark for not worthy motor

规格号 Gauge number	
单级 single reducer	0、1、2、3、4、5、6
双级 Double-stage reducer	10、20、21、31、41、42、52、53、63

注:轴输入时，电机相关表示框全部省略
Note:input shaft,the motor related said box all omitted

类型代号 Power source classification

可配用电机	专用电机	Special cycloidal speed reducer motor
可配用电机	三相异步电机	Three-phase asynchronous motor
可配用电机	YVF系列变频调速电机	YVF frequency conversion motor
可配用电机	YEJ系列电磁制动电机	YEJ electromagnetic brake motor
可配用电机	YB系列防爆电机	YB explosion proof electric motor
可配用电机	直流电机	DC motor

注:
1.除专用电机外其余动力原配置时,需用连接法兰连接;
2.如需单向电机、船用电机、多速电机、伺服电机、NEMA系列电机等电机,请向技术部门垂询。
Note:
1.Except special cycloidal motor when other power sources are equipped with,coupling flange of motor id requested;
2.If require single phase motor, motor for vessel, multi-speed motor,servomotor and NEMA motor,p-lease consult wirh technology department.

电机接线盒位置(从电机风扇罩向输出端看)
Motor thermal box position(viewed output shaft from fan cawl of motor)

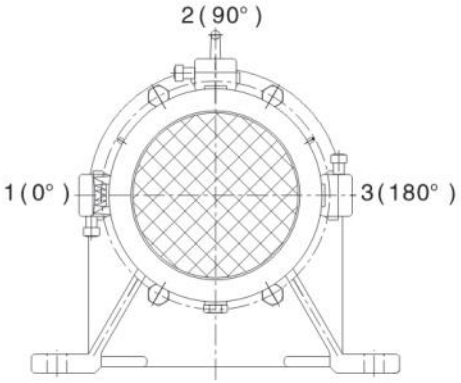

0° 为正常位置
0° means the standard position

安装型式及代号 Mounting position &Code

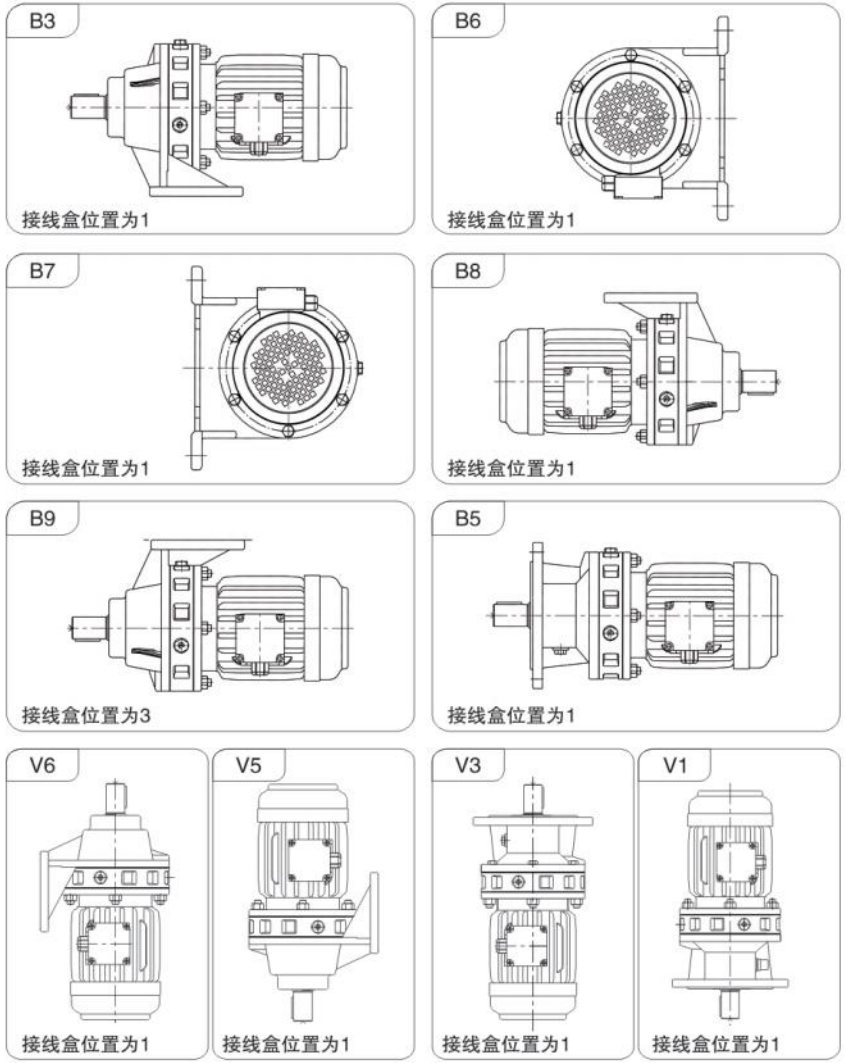

注：B9安装方式接线盒位置默认为3，其余默认为1。

系列对照表 Series comparisontable

摆线针轮减速机系列及机型号对照
Comparison of base no.s between different supplierst
单级机型对照表 Single stage cycloid reducer

行业标准Z											
天津X系列 Tianjin X series		1		2	3	4	5	6	7	8	9
上海、常州B系列 Shanghai、Changzhou B series		09		10	11	12	13	14		15	16
星光B系列 Xingguang B series				0	1	2	3	4		5	6
一机部B系列 Mechanical department B series				12	15	18	22	27		33	39
星光JXJ系列 Xingguang JXJ series				0	1	2	3	4		5	6
WB微摆系列 Miniature cycloid WB series	WB85		WB100	WB120	WB150						

天津X系列 Tianjin X series			31	32	42	53	63	74	84	85	95
上海、常州B系列 Shanghai、Changzhou B series			1109	110	120	131	141		152	153	163
星光B系列 Xingguang B series				10	20	31	41		52	53	63
一机部B系列 Mechanical department B series				1512	1812	2215	2715		3318	3322	3922
星光JXJ系列 Xingguang JXJ series				10	20	31	41		52	53	63
WB微摆系列 Miniature cycloid WB series	WB1065	WB1285	WB1510								

说明：不同标准的相应型号，其性能指标基本相同，在外形、安装和联接尺寸上略有不同；用户在选用我司B系列与JXJ系列摆线针轮减速机时可先询问技术部门。
MOTE:Different Base No.similar performance,But there id a little difference on outline size mounting size and connecting size.It is recommended to slelct our B and JXJ series cycloidal speed reducer.

选型指南

A.选型注意事项

1.根据负载转矩、传动比、输出转速确定所需的减速机型号、电机规格；
2.根据使用情况在安装型式图中确定安装型式及输出轴方向；
3.选择与无级变速器组合的机型，为充分显示本机型的优良特性，常用转速应选择变速范围中间值；
4.订货时,请尽量选择本样本内的标准产品,并按规范的型号表示方法进行书写;用户如有特殊要求,请在合同上详细说明并与本公司协商。

B.安装与使用注意事项

1.减速机须安装在平整坚固的底座上，底脚螺栓必须紧固以防震松和产生非正常震动;
2安装时应调整原动机、减速机与工作机各联接轴伸，以保证同轴度；本减速机适合于24小时连续工作，额定输入转速一般应小于1500r/min,通过三相电动机转接任意二根相线，可以正向或反向运转；
3.减速机装配电动机时,应检查电机连接线正常,并在输入孔孔壁及键槽处涂抹黄油,避免装配过紧;
4.与无级变速器组合的机型,严禁停机调速,本减速机使用的润滑油为220#极压齿轮油,无级变速器使用的润滑油为Ub-3无级专用油。在储运和储存过程中,须注意防潮;
5.本减速机无自锁作用，如用于升降装置等危险场合时，应选用制动电机或输入端加配制动装置;
6.联轴器、齿轮、链轮或皮带轮等联接件与减速机连接时,不允许用重锤敲击,推荐利用轴伸端螺孔通过压板用螺栓将联接件压入，并使其贴紧轴肩;
7.加载试机前,应空载运转半小时左右,确认空载无故障、无异常冲击时，方可加载运行;
8.加载试机前,应注意观察减速机的温升、密封、噪声、振动等是否正常;运转两小时后、检查油池温升及最高油温,减速机允许最大温升为60℃、但最高油温不能超过100℃,超温时应停机检查。

C.维护注意事项

1.减速机的环境温度为-10℃ ~ +40℃, 海拔高度1000米以下,当使用特殊环境(如温度过高或过低、通风不好等)时,应适当调整使用系数或咨询我公司技术部门;
2.减速机应装在遮蓬的交通工具上，运输运输途中应避免剧烈碰撞和抛掷，发现包装箱损坏时要仔细检查，确实未损坏本机方可投入使用;
3.存放或停用了4 ~ 6月的减速机,如果油封和机座之间没有润滑剂,建议更换油封,避免油封塑料老化粘于轴或失去弹性而导致性能下降;
4.应定期用油量指示器检查油量、使其在正确的范围内，润滑油不足可能导致摆线轮快速磨损和效率降低。

系列对照表 Series comparisontable

摆线针轮减速机系列及机型号对照
Comparison of base no.s between different supplierst
单级机型对照表 Single stage cycloid reducer

行业标准Z											
天津X系列 Tianjin X series		1		2	3	4	5	6	7	8	9
上海、常州B系列 Shanghai、Changzhou B series		09		10	11	12	13	14		15	16
星光B系列 Xingguang B series				0	1	2	3	4		5	6
一机部B系列 Mechanical department B series				12	15	18	22	27		33	39
星光JXJ系列 Xingguang JXJ series				0	1	2	3	4		5	6
WB微摆系列 Miniature cycloid WB series	WB85		WB100	WB120	WB150						

天津X系列 Tianjin X series			31	32	42	53	63	74	84	85	95
上海、常州B系列 Shanghai、Changzhou B series			1109	110	120	131	141		152	153	163
星光B系列 Xingguang B series				10	20	31	41		52	53	63
一机部B系列 Mechanical department B series				1512	1812	2215	2715		3318	3322	3922
星光JXJ系列 Xingguang JXJ series				10	20	31	41		52	53	63
WB微摆系列 Miniature cycloid WB series	WB1065	WB1285	WB1510								

说明：不同标准的相应型号，其性能指标基本相同，在外形、安装和联接尺寸上略有不同；用户在选用我司B系列与JXJ系列摆线针轮减速机时可先询问技术部门。
MOTE:Different Base No.similar performance,But there id a little difference on outline size mounting size and connecting size.It is recommended to slelct our B and JXJ series cycloidal speed reducer.

选型指南

A.选型注意事项

1.根据负载转矩、传动比、输出转速确定所需的减速机型号、电机规格；
2.根据使用情况在安装型式图中确定安装型式及输出轴方向；
3.选择与无级变速器组合的机型，为充分显示本机型的优良特性，常用转速应选择变速范围中间值；
4.订货时,请尽量选择本样本内的标准产品,并按规范的型号表示方法进行书写;用户如有特殊要求,请在合同上详细说明并与本公司协商。

B.安装与使用注意事项

1.减速机须安装在平整坚固的底座上，底脚螺栓必须紧固以防震松和产生非正常震动；
2安装时应调整原动机、减速机与工作机各联接轴伸，以保证同轴度；本减速机适合于24小时连续工作，额定输入转速一般应小于1500r/min,通过三相电动机转接任意二根相线，可以正向或反向运转；
3.减速机装配电动机时,应检查电机连接线正常,并在输入孔孔壁及键槽处涂抹黄油,避免装配过紧；
4.与无级变速器组合的机型,严禁停机调速,本减速机使用的润滑油为220#极压齿轮油,无级变速器使用的润滑油为Ub-3无级专用油。在储运和储存过程中,须注意防潮；
5.本减速机无自锁作用，如用于升降装置等危险场合时，应选用制动电机或输入端加配制动装置；
6.联轴器、齿轮、链轮或皮带轮等联接件与减速机连接时,不允许用重锤敲击,推荐利用轴伸端螺孔通过压板用螺栓将联接件压入，并使其贴紧轴肩；
7.加载试机前,应空载运转半小时左右,确认空载无故障、无异常冲击时，方可加载运行；
8.加载试机前,应注意观察减速机的温升、密封、噪声、振动等是否正常;运转两小时后、检查油池温升及最高油温,减速机允许最大温升为60℃、但最高油温不能超过100℃,超温时应停机检查。

C.维护注意事项

1.减速机的环境温度为-10℃～+40℃,海拔高度1000米以下,当使用特殊环境(如温度过高或过低、通风不好等)时,应适当调整使用系数或咨询我公司技术部门；
2.减速机应装在遮蓬的交通工具上，运输运输途中应避免剧烈碰撞和抛掷，发现包装箱损坏时要仔细检查，确实未损坏本机方可投入使用；
3.存放或停用了4～6月的减速机,如果油封和机座之间没有润滑剂,建议更换油封,避免油封塑料老化粘于轴或失去弹性而导致性能下降；
4.应定期用油量指示器检查油量、使其在正确的范围内，润滑油不足可能导致摆线轮快速磨损和效率降低。

Guide for selection

A.Selection Cautions

1.Select the the correct reducer and motor, according to the laod torque,transmission ratio and out put speed;

2.Confirm the installtion form and output shaft direction in the graph according to the using condition;

3.When choosing the model to work with variator,in order to display all advantages,commonly used speed should be median range;

4.When ordering, please try to choose the sample of the standard products,according to the stanfard model designation; if users have special requirements,please speacity in details in the contract and negotiate with us.

B.Installation and usage cautions

1.Should be installed on a flat and strong base, the bottom bolts must be tighten to avoid loosening and abnormal vibration;

2.When installation, should adjust prime mover,deceleration machine and work out the connection machine shaft, in order to ensure the coaxial tolerance; This deceleration machine suitable for 24 hours of continuous work generally rated input speed should be less than 1500r/min through the three-phase motor pick any change in the two lines,can be positive or reverseoperation;

3.Gearbox assembly with motor, should check the electrcal wiring, and daub bullet on the input hole and keyway, avoid assembly too tightly;

4.The combination model with stepless variator, it is strictly prohibited to turn the hand wheel when stopping. Lubricating oil for cycloid reducer is 220# extreme pressure gear oil, for viriator is ub-3 apprapriatile oil, In the storage and transportation and storage process,must pay attention to moisture proof;

5.The speed reducer do not have self-locked functions,when used for dangerous situation, like lift systom,should choose brake motor or input braking device;

6.When work with coupler,gear sprocket or pulley, it's not allow to knock the machine heavily, It's better to use fllower bolt though shaft screw boles to finish connection and make it into shaft shoulder;

7.No-load running should be around half an hour before loading test, in order to make sure there' s no failure or abnomal impact;

8.After loading test, we should pay attention to observe the rise of temperature of the reducer, sealing, noise and vibrration is normal. After two hours operation, check the oil pool temperature rise and the highest oil trmperature,speed reducer allow maximum temperature 60℃.
But for the highest oil temperature should not exceed 100℃ , should stop and check when tempertu-re is too high.

C.Maintenance cautions

1.Environment temperature for the speed reducer is -10℃ ~ +40,altitude below 1000m;

2.The reducer should be delivered in the vehicle with shelter, and avoid violent collisions and throwing during transportation, If the pocking was demaged, shond check the machine carefully before using;

3.When the reducer was stored or stop working for 4 to 6 months , if oil seal and base without lubricant , recommend to replace oil seal, because oil seal rubber aging sticky on a shaft of lose flexibility and case performance down;

4.Should check the oil through oil indicator regularly, make it in the right range; Oil shortage could lead to cycloid gear rapid wear and low efficiency.

减速机的用途和负载性质分类 Application & load classification

用途 Application		载荷分类 Load grade	用途 Application		载荷分类 Load grade
搅拌器 Blender	纯液体 Pure liquid	Ⅰ	塑料机械 Plastic machine	挤出机(颗粒/棒料/管料) Extruder(particle/rod/pipe)	Ⅰ
	液体和固体 Liquid and Solid	Ⅱ		吹塑机 Blow molder	
	液体(密度可变) Liquid (variable density)		卷扬机(绞车) Windlass	中型机 Medium machine	Ⅱ
鼓风机 Fan	离心式、叶片式 Centrifuge,Vane	Ⅰ		重型机 Heavey machine	Ⅲ
	叶轮式 Impeller	Ⅱ	石油工业 Petroleum industry	石蜡压滤机 Filter press for paraffin wax	Ⅱ
压气机 压缩机 Air Compressor	离心式 Centrifugal	Ⅱ		结晶冷冻机 Refrigerator crystalline matter	
	叶轮式、往复式(多缸) Impeller, Reciprocating (multi-cylinder)	Ⅰ	橡胶与塑料工业 Rubber and Plastic industry	精炼机、橡胶压延机 Refiner,rolling press	Ⅱ
	往复式(单缸) Reciprocating(single-cylinder)	Ⅲ		破胶机、混炼机 Crusher for rubber,Blender	Ⅲ
*运输机械 Conveyor	送料均匀 Constant feeding	Ⅰ	纺织机械 Textile machine	织布机、梳棉机、扎布机 Loom,Card,Mangle	Ⅱ
	送料不均 Non-Constant feeding	Ⅱ		纺纱机、洗涤机、印染机 Spinning,Washer,Dyeing machine	
	往复、振动式 Reciprocating, Vibration	Ⅲ	食品机械 Food processing machinery	灌瓶机、包装机、碾米机 Filling machine,Packaging machine Rice mills	Ⅰ
*石料机型 Stonemachine	球磨机、桶形磨机 Ball mill,Barrel mills	Ⅲ		甘蔗粉碎机、切断机、*压榨机 Cane knives,Cane mills,Presser	Ⅱ
	粉碎机、破碎机、转炉 Crusher,Breakers,Convertor			搅拌机、绞肉机、清洗机 Blender,Meat mincer,Washer	

注:1.Ⅰ、稳定载荷; Ⅱ中等冲击载荷; Ⅲ、重冲击载荷 2.*--按每天工作24小时选取
Notes:1.Ⅰ=stable losd;Ⅱ=medium load;Ⅲ=heavy load 2.*--select as per 24 hours per day

使用系数K
K–service factor

原动机种类 Kind of prime mover	工作条件 Daily operating time \ 使用系统载荷性质等级 Load grade	I 稳定 Stable	II 中等冲击 Medium	III 重冲击 Heavy
电动机 Motor	断续工作3小时/天 Intermitent 3 hours/day	0.8	1	1.35
	连续8~10小时/天 Continuous 8–10 hours/day	1.0	1.2	1.5
	24小时/天 24hours/day	1.2	1.35	1.6

注：1.最大瞬间载荷或起动载荷不超过额定载荷的160%；
2.若运转中常有短暂间断，则可选用比标准型更小一号的机型，这时请垂询我公司技术部门；
3.若运转中需要频繁启动或有重载荷冲击，可能要求特殊加固或者其他措施，这时请向我公司技术部门咨询。

Notes:
1.Maximum instantaneous load or starting load should not be more than 160% of nominal load.
2.If there is frequent short intermittence in working, it is recommended to select one size smaller than standard one,for the moment please consult with our technical department.
3.If there is frequent frequent start or heavy load,it may take special step to strengthen, for the moment please consult with our tec–hnical department.

连接系数CF
Connecting coefficient CF

连接方法 Connecting mnethod	CF
链条 Chain sprocket	1
齿轮 Gear	1.25
V型皮带轮V–belt wheel	1.5

冲击系数 FS
Shock coefficient FS

冲击程度 Shock	FS
无冲击 Non–shock	1
轻冲击 Light shock	1~1.2
重冲击 Heavy shock	1.4~1.6

输出轴径向力位置系数
Lf coefficient for radial force on output shaft

径向力位置 Radial force position L(mm)	机型号 Base No. B09	B0	B1	B2	B3	B4	B5	B6	B7	B8	B9
5	0.847	0.853									
10	0.924	0.912	0.810								
15	1.000	0.971	0.862	0.825							
20	1.075	1.029	0.915	0.867	0.863						
25	1.151	1.088	0.968	0.910	0.897	0.848					
30	1.227	1.147	1.021	0.953	0.932	0.877	0.848				
35		1.206	1.074	1.038	0.966	0.906	0.903	0.842			
40			1.127	1.081	1.000	0.936	0.812	0.859	0.812	0.816	
45			1.180	1.124	1.034	0.965	0.826	0.876	0.826	0.827	0.813
50			1.230	1.210	1.068	0.994	0.841	0.892	0.841	0.838	0.820
60				1.290	1.136	1.053	1.000	0.925	0.870	0.860	0.836
70					1.205	1.111	1.039	0.959	0.898	0.881	0.852
80					1.273	1.170	1.077	0.992	0.928	0.903	0.867
90						1.228	1.116	1.025	0.957	0.924	0.887
100						1.287	1.154	1.058	0.986	0.946	0.883
110							1.193	1.091	1.014	0.968	0.898
120							1.232	1.124	1.043	0.989	0.914
130								1.158	1.072	1.011	0.930
140								1.191	1.101	1.032	0.945
150								1.224	1.130	1.054	0.961
160								1.257	1.159	1.076	0.977
170									1.188	1.097	0.992
180									1.217	1.119	1.023
190										1.140	1.039
200										1.162	1.055

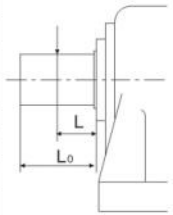

如 "L=Lo/2"
Lf=1

双轴型摆线针轮减速机选型表
Selection table for donble shaft cycloidal pin wheel reducer

输出转速n1=1500r/min
Input speed n1=1500r/min

型号 Model	传动比i	9	11	17	23	29	35	43	59	71	87
	输出转速n2(r/min)	167	136	88	65	52	43	35	25	21	17
B/JXJ0	P1(KW)	1.1	1.1	0.75	0.75	0.55	0.55				
	T2(N · m)	56	69	73	99	92	112				
	F12(N)	2200	2370	2730	3020	3250	3470				
B/JXJ1	P1(KW)	2.2	2.2	2.2	1.5	1.1	1.1	0.75	0.55	0.55	
	T2(N · m)	113	139	214	198	181	219	184	189	225	
	F12(N)	2050	2190	2530	2810	3020	3220	3450	3860	4090	
B/JXJ2	P1(KW)	4	4	4	3	2.2	1.5	1.5	1.1	1.1	0.75
	T2(N · m)	205	252	390	396	363	299	368	378	450	379
	F12(N)	3330	3560	4120	4560	4910	5230	5600	6260	6640	7130
B/JXJ3	P1(KW)	11	7.5	7.5	5.5	5.5	4	4	2.2	2.2	1.5
	T2(N · m)	566	473	732	727	909	799	982	756	900	758
	F12(N)	4710	5060	5840	6460	6960	7420	7940	8890	9420	10100
B/JXJ4	P1(KW)	11	11	11	11	11	7.5	5.5	4	4	3
	T2(N · m)	566	695	1074	1454	1818	1499	1350	1375	1637	1516
	F12(N)	6020	6450	7460	8250	8890	9470	10140	11350	12020	12920
B/JXJ5	P1(KW)		18.5	18.5	18.5	15	15	11	7.5	7.5	7.5
	T2(N · m)		1169	1806	2446	2479	2998	2701	2578	3069	3791
	F12(N)		13380	15480	17120	18450	19650	21040	23540	24950	26780
B/JXJ6	P1(KW)		18.5	18.5	18.5	18.5	18.5	15	15	11	11
	T2(N · m)		1169	1806	2446	3057	3697	3683	5157	4502	5561
	F12(N)		35920	39196	46140	46600	49670	51500	51500	51500	51500

外型尺寸
Outline dimension

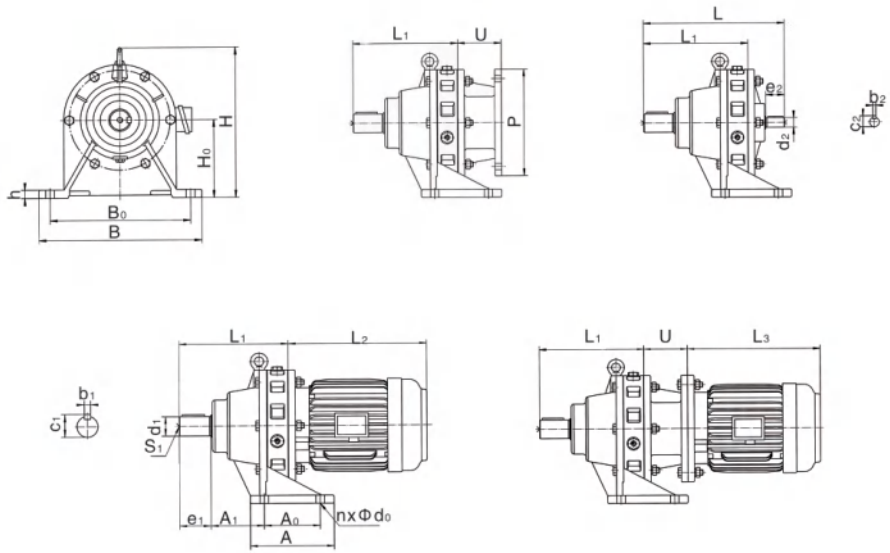

型号 Model	机座号 Base NO.	安装尺寸 Mounting dimension						轴伸连接尺寸 Shaft extension dimension									外型尺寸 Outline dimension					
								输出轴 Output shaft					输入轴 Input shaft									
		H_0	A_1	A_0	B_0	n	d_0	S_1	d_1 (f6)	b_1	c_1	e_1	d_2 (f6)	b_2	c_2	e_2	H	A	B	h	L	L_1
BW*–i BWD*–i–P BWY*–i–P	B0	100	58	90	150	4	12	M8	30	8	33	35	15	5	17	22	190	120	185	15	214	165
	B1	120	69	110	240	4	13.5	M10	35	10	38	56	18	6	20.5	35	230	160	280	15	262	194
	B2	140	76	150	280	4	14.5	M10	45	14	48.5	68	22	6	24.5	40	305	200	320	20	320	246
	B3	160	79	200	340	4	18.5	M10	55	16	59	80	30	8	33	55	360	250	390	25	393	296
	B4	200	93	260	380	4	22	M12	70	20	74.5	101	35	10	38	78	430	320	430	22	498	374
	B5	240	54	340	440	4	22	M16	90	25	95	119	45	14	48.5	80	495	400	490	25	580	435
	B6	280	60	440	500	4	26	M20	100	28	106	138	50	14	53.5	80	590	520	560	35	670	528
XJ*–i JXJ*–i–P JXJY*–i–P	JXJ0	100	67	90	180	4	11	M8	25	8	28	34	15	5	17	22	191	120	210	15	208	159
	JXJ1	140	95	100	250	4	15.5	M10	35	10	38	58	18	6	20.5	35	245	150	290	15	263	195
	JXJ2	140	65	180	285	4	15.5	M10	50	16	53.5	70	22	6	24.5	40	304	230	335	20	321	247
	JXJ3	160	70	220	350	4	20	M10	65	18	69	110	30	8	33	55	362	280	410	25	447	353
	JXJ4	190	93	270	400	4	22	M12	80	22	85	105	35	10	38	78	422	330	460	22	502	378
	JXJ5	250	35	380	480	4	22	M16	90	25	95	130	45	14	48.5	80	540	440	530	25	631	462
	JXJ6	290	45	480	560	4	26	M20	100	28	106	165	50	14	53.5	80	650	560	620	35	725	554

外型尺寸 Outline dimension

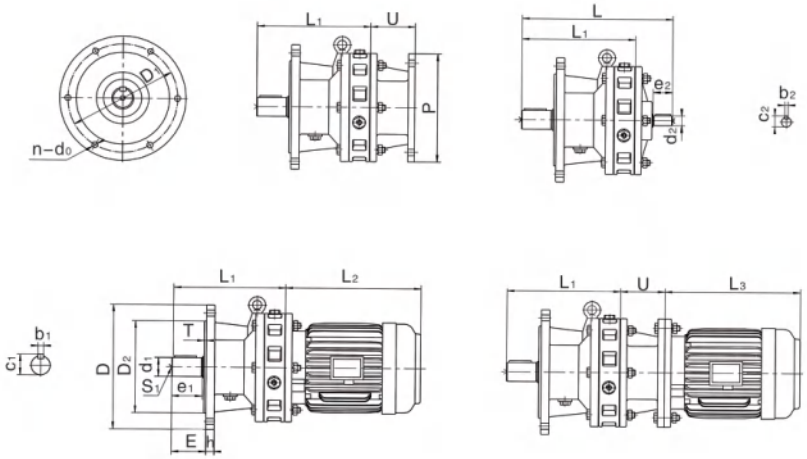

型号 Model	机座号 Base NO.	安装尺寸 Mounting dimension						轴伸联接尺寸 Shaft extension dimension									外型尺寸 Outline dimension			
								输出轴 Ouput shaft					输入轴 Input shaft							
		D	D_1	D_2 (f7)	E	n	d_0	S_1	d_1 (f6)	b_1	c_1	e_1	d_2 (f6)	b_2	c_2	e_2	h	T	L	L_1
BL*-i BLD*-i-P BLY*-i-P	B0	190	160	140	39	4	12	M8	30	8	33	35	15	5	17	22	11	3	214	165
	B1	230	200	170	54	6	11	M10	35	10	38	46	18	6	20.5	35	12	4	263	195
	B2	260	230	200	70	6	11	M10	45	14	48.5	60	22	6	24.5	40	13	4	320	246
	B3	340	310	270	81	6	14	M10	55	16	59	74	30	8	33	55	15	5	390	296
	B4	430	390	350	109	12	14	M12	70	20	74.5	101	35	10	38	78	20	5	498	374
	B5	490	450	400	131	12	18	M16	90	25	95	114	45	14	48.5	80	30	8	580	435
	B6	580	520	460	138	12	24	M20	100	28	106	138	50	14	53.5	80	35	8	670	528
XJL*-i JXJL*-i-P JXJLY*-i-P	JXJL0	180	160	130	39	4	12	M8	25	8	28	35	15	5	17	22	11	3	218	165
	JXJL1	230	200	170	52	6	11	M10	35	10	38	45	18	6	20.5	35	12	4	261	193
	JXJL2	260	230	200	65	6	11	M10	50	16	53.5	57	22	6	24.5	40	13	4	315	241
	JXJL3	340	310	270	105	6	14	M10	65	18	69	96	30	8	33	55	15	5	414	320
	JXJL4	400	360	316	114	12	18	M12	80	22	85	105	35	10	38	78	20	5	503	379
	JXJL5	495	450	400	140	12	18	M16	90	25	95	130	45	14	48.5	80	30	6	631	462
	JXJL6	580	520	455	177	12	24	M20	100	28	106	165	50	14	53.5	80	35	8	725	554

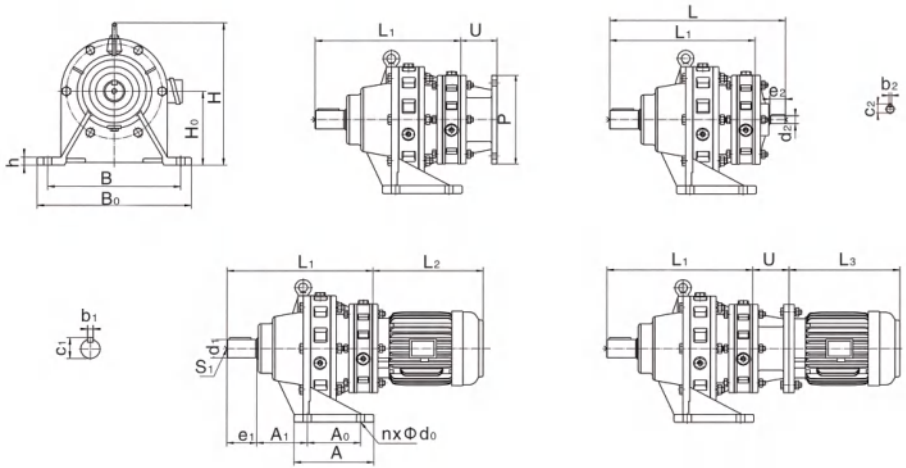

BWE、BWED、BWEY 型卧式双级外形及安装尺寸表

机座号 Base NO.	安装尺寸 Mounting dimension						轴伸联接尺寸 Shaft extension dimension									外型尺寸 Outline dimension					
							输出轴 Output shaft					输入轴 Input shaft									
	H_0	A_1	A_0	B_0	n	d_0	S_1	d_1 (f6)	b_1	c_1	e_1	d_2 (f6)	b_2	c_2	e_2	H	A	B	h	L	L_1
B10	120	69	110	240	4	13.5	M10	35	10	38	56	15	5	17	22	230	160	280	15	325	274
B20	140	76	150	280	4	14.5	M10	45	14	48.5	68	15	5	17	22	305	200	320	20	369	318
B31	160	79	200	340	4	18.5	M10	55	16	59	80	18	6	20.5	35	360	250	390	25	436	370
B41	200	93	260	380	4	22	M12	70	20	74.5	101	18	6	20.5	35	430	320	430	22	530	462
B42	200	93	260	380	4	22	M12	70	20	74.5	101	22	6	24.5	40	430	320	430	22	556	482
B52	240	54	340	440	4	22	M16	90	25	95	119	22	6	24.5	40	495	400	490	25	634	560
B53	240	54	340	440	4	22	M16	90	25	95	119	30	8	33	55	495	400	490	25	680	582
B63	280	60	440	500	4	26	M20	100	28	106	138	30	8	33	55	590	520	560	35	746	648

XJE、JXJE、JXJEY 型卧式双级外形及安装尺寸表

机座号 Base NO.	安装尺寸 Mounting dimension						轴伸联接尺寸 Shaft extension dimension									外型尺寸 Outline dimension					
							输出轴					输入轴									
	H_0	A_1	A_0	B_0	n	d_0	S_1	d_1 (f6)	b_1	c_1	e_1	d_2 (f6)	b_2	c_2	e_2	H	A	B	h	L	L_1
JXJE10	140	95	100	250	4	15.5	M10	35	10	38	58	15	5	17	22	245	150	290	15	325	274
JXJE20	140	65	180	285	4	15.5	M10	50	16	53.5	70	15	5	17	22	304	230	335	20	369	318
JXJE31	160	70	220	350	4	20	M10	65	18	69	110	18	6	20.5	35	362	280	410	25	503	435
JXJE41	190	93	270	400	4	22	M12	80	22	85	105	18	6	20.5	35	422	330	460	22	530	462
JXJE42	190	93	270	400	4	22	M12	80	22	85	105	22	6	24.5	40	422	330	460	22	564	490
JXJE52	250	35	380	480	4	22	M16	90	25	95	130	22	6	24.5	40	540	440	530	25	634	560
JXJE53	250	35	380	480	4	22	M16	90	25	95	130	30	8	33	55	540	440	530	25	680	582
JXJE63	290	45	480	560	4	26	M20	100	28	106	165	30	8	33	55	650	560	620	35	746	648

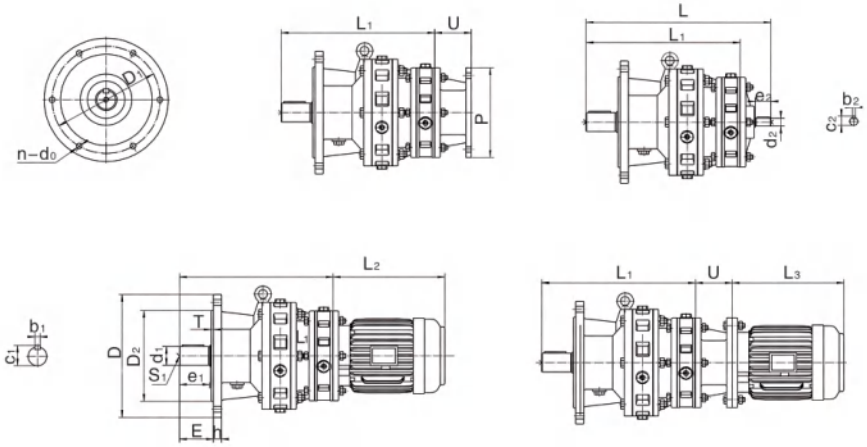

BLE、BLED、BLEY 型立式双级外形及安装尺寸表

机座号 Base NO.	安装尺寸 Mounting dimension						轴伸联接尺寸 Shaft extension dimension									外型尺寸 Outline dimension			
							输出轴 Ouput shaft					输入轴 Input shaft							
	D	D_1	D_2 (f7)	E	n	d_0	S_1	d_1 (f6)	b_1	c_1	e_1	d_2 (f6)	b_2	c_2	e_2	h	T	L	L_1
B10	230	200	170	54	6	11	M10	35	10	38	46	15	5	17	22	12	4	325	273
B20	260	230	200	70	6	11	M10	45	14	48.5	60	15	5	17	22	13	4	369	318
B31	340	310	270	81	6	14	M10	55	16	59	74	18	6	20.5	35	15	5	446	378
B41	430	390	350	109	12	14	M12	70	20	74.5	101	18	6	20.5	35	20	5	534	462
B42	430	390	350	109	12	14	M12	70	20	74.5	101	22	6	24.5	40	20	5	564	490
B52	490	450	400	131	12	18	M16	90	25	95	114	30	8	33	55	30	8	680	582
B53	490	450	400	131	12	18	M16	90	25	95	114	30	8	33	55	30	8	680	582
B63	580	520	460	138	12	24	M20	100	28	106	138	50	14	53.5	80	35	8	746	648

XJLE、JXJLE、JXJEY 型立式双级外形及安装尺寸表

机座号 Base NO.	安装尺寸 Mounting dimension						轴伸联接尺寸 Shaft extension dimension									外型尺寸 Outline dimension			
							输出轴 Ouput shaft					输入轴 Input shaft							
	D	D_1	D_2 (f7)	E	n	d_0	S_1	d_1 (f6)	b_1	c_1	e_1	d_2 (f6)	b_2	c_2	e_2	h	T	L	L_1
JXJLE10	230	200	170	52	6	11	M10	35	10	38	45	15	5	17	22	12	4	325	274
JXJLE20	260	230	200	65	6	11	M10	50	16	53.5	57	15	5	17	22	13	4	369	318
JXJLE31	340	310	270	105	6	14	M10	65	18	69	96	18	6	20.5	35	15	5	470	402
JXJLE41	400	360	316	114	12	18	M12	80	22	85	105	18	6	20.5	35	20	5	530	462
JXJLE42	400	360	316	114	12	18	M12	80	22	85	105	22	6	24.5	40	20	5	564	490
JXJLE52	495	450	400	140	12	18	M16	90	25	95	130	22	8	24.5	55	30	6	634	560
JXJLE53	495	450	400	140	12	18	M16	90	25	95	130	30	8	33	55	30	6	680	582
JXJLE63	580	520	455	177	12	24	M20	100	28	106	165	30	8	33	55	35	8	746	648

直联型摆线减速机选型步骤

确认负载系数

实际需用转矩T1计算 → 负载性质选定 → 负载系数选定

注：
T1:低速轴实际需用转矩(N・m)
T2:低速轴许用扭矩(N・m)
K:减速机与电动额定功率之比
K:减速机许用功率电动机额定功率

选型一：
- T1:100N.m
- 驱动设备：运输机（送料均匀）
  负载性质=I
- 运转时间：24小时/天
  负载系数=1.2

选型一：
- T1:3000N.m
- 驱动设备：搅拌器（密度可变）
  负载性质=II
- 运转时间：断续工作3小时/天
  负载系数=1.0

选定机构型号

计算电机功率 P1=≥T1 x n2/9550 → 选型表 i、n2确定 → 验算输出扭矩 T1≤T2 → K栏内是数值或※

P1:电动机的额定功率
n2:输出转速r/min
i:传动比

如是数值 → 确定机型号 负载系数≤K

如是※ → 确定机型号 T、x负载系数≤T2

输出转速：89r/min
电源频率：50Hz
电动机：4P
$P1 \geq \frac{T1xn2}{9550}$ (kW)
$\frac{100x89}{9550}$ =0.93 (kW)
P1=1.1(kW)
查选型表n2=88 i=17
T1(100N・m) < T2(107N・m)
K栏内数值
负载系数(1.2) < K(1.36)
机型号:B/JXJ1选取

输出转速：24r/min
电源频率：50Hz
电动机：6P
$P1 \geq \frac{T1xn2}{9550}$ (kW)
$\frac{3000x24}{9550}$=7.54 (kW)
P1=11(kW)
查选型表n2=23 i=43
T1(3000N・m) < T2(3068N・m)
K栏内数值※
T1(3000N・m)x负载系数(1.0)=3000 < T2(3068N・m)
机型号:B/JXJ5选取

验算径向力

轴上负载径向力

注：
R:链轮、皮带轮等圆半径(m)
F1:实际需用径向力(N)
F12:低速轴上许用径向力(N)
（选型表中F2栏内值）
C:联接系数
F3:冲击系数
L1:负载作用系数

当实际上无冲击及负载作用在低速轴轴伸中点上时 → 验算径向力 F1=T1R≤F12C1(N)

当有冲击及负载作用在低速轴轴伸中点以外时 → 验算径向力 F1=T1R≤F12XL1XC1XF2(N)

与使用设备联接方式:链轮
链轮节圆半径：R=0.05m
径向力作用位置：在低速轴轴伸中点上验算输出轴上径向力
$F1=\frac{T1}{R} \leq \frac{F2}{Cf}$
$\frac{100}{0.05}$ =2000 < $\frac{2530}{1}$
机型号：B/JXJ1符合要求

- 与所驱动设备联接方式：联轴器

选定型号

确认安装尺寸 → 确认润滑方式

- 输出轴方向：水平
  结构形式：专用电动机直联型
- 安装方式：D1安装
  线盒位置：90°
  型号：BWD1-17-1.1-90°
- 安装尺寸：见外形尺寸表
- 润滑方式：油浴润滑

- 输出轴方向：立式向下
  结构形式：普通电动机直联型
- 安装方式：F3安装
  型号：BLY5-43-11-F3
- 安装尺寸：见外形尺寸表
- 润滑方式：油泵润滑

注：使用系数栏为※时，如电机满负荷运转，减速机会出现过载现象，在这种情况下，一定要在许用扭矩栏内所规定的额定转矩值内使用或增加过载保护装置。

Guidance of selection

Confirm load factor	The actual need to rque T1 calculation ↓ Load nature selected ↓ Load coefficient selected	Note: T1:actual need low speed shaft torque(N · m) T2: low speed shaft allowable torque(N · m) K:reducer and electric power rating ratios K:Reducer allowable powerMotor power rating	Selection a: •T1:100N.m •Driving equipment:transport plane (feeding uniform) load property=I •Running time:24hours/days load coefficient=1.2	Selection a: •T1:3000N.m •Driving equipmen:blender(density variable) load property=II •Running time:3 hours /days working intermittently load property=1.0
Choose maxhine	Calculation motor power P1=≥T1 × n2/9550 ↓ Modle selection guide i、n2confrim ↓ Checking the output torque T1≤T2 ↓ K Khurdle numerical value er※ if numerical value Sure maxhine load factor≤K so※ Sure maxhine T、x load factor ≤T2	P1:Motor n2:Output speed r/min i:transmission ratio	Output rotatespeed:89r/min Supply frenquency:50Hz Motor：4P $P1 \geq \frac{T1xn2}{9550}$ (kW) $\frac{100x89}{9550}$ =0.93 (kW) P1=1.1(kW) Check selection table n2=88 i=17 T1(100N · m) < T2(107N · m) K Column numerical Load factor(1.2) < K(1.36) Type:B/JXJ1 choose	Output rotatespeed：24r/min Supply frenquency：50Hz Motor：6P $P1 \geq \frac{T1xn2}{9550}$ (kW) $\frac{3000x24}{9550}$=7.54 (kW) P1=11(kW) Check selection table n2=23 i=43 T1(3000N · m) < T2(3068N · m) K Column numerical※ T1(3000N · m)xLoad factor(1.0)= 3000 < T2(3068N · m) Type:B/JXJ5 choose
Checking radial force	Shaft load radial force When in fact no impact and load used in low speed shaft axis halfway point out Checking radial force F1=T1R≤F12C1(N) When in fact impact and used in low speed shaft axis halfway point out Checking radial force F1=T1R ≤F12XL1.C1.F2(N)	Note： R:sorocket and pulley pitcit cirelerselilius(m) Fr:actual need radial force(N) Fr2:low speed shaft allowadle radial force(N) Cf:connection coefficienrt fs:impact coefficient Lf:the load effect coefficient	And use the equipmenr way this way. the sprocke The sprocket quarter circle radius R=0.05m Radial force role position：in low speed shaft axis on the halfway point out With the drive equipment way this way:coupling $\frac{T1}{R} \leq \frac{F2}{Cf}$ $\frac{100}{0.05}$ =2000 < $\frac{2530}{1}$ Type:B/JXJ1 Size Up	With the drive equipmt way:coupling
	Selected modle ↓ Confirm Installation Method → Confirm lubrication methods		•Output direction: Horizonal Stuctural style：Dedicated BLY Installation type:D1set up Thermal box position :90° type：BWD1-17-1.1-90° •set up size：Reference shape dimension table •lubricating system:bath lubriciafion	•Output direction: vertical Stuctural style：ordinary inline motor Installrion type:F3set up Type：BLY5-43-11-F3 •set up size：Reference shape dimension table •lubricating system:bath lubriciafion

Note:use coefficient colurmn,for,such as motor is tilled,slowdown,opportunity to appear overoad phenmenon.in this case must be in allowble torque column the rating of the provisions values increase in use or overload protection device.

双轴型摆线减速机选型步骤

确认负载系数	实际需用转矩T1计算 ↓ 负载性质选定 ↓ 负载系数选定	注： T:低速轴实际需用转矩(N · m) T:低速轴许用扭矩(N · m)	选型一： •T1=3800N · m •驱动设备: 运输机（送料不均匀）负载性质=II •运转时间：连续8-10小时/天 负载系数= 1.2
选定机构型号	传动比选定i=n1/n2 ↓ 查选型表 ↓ 确定机型号 T,x负载系数≤T2	N1:输入转速 r/min N2:输出转速 r/min I:传动比	•输入转速 N1:750r/min 输出转速N2:25r/min 电源频率：50Hz I=N1/N2=750/25=30 •由选型表查：N2=26N1=29 •3800(N · M) × 1.2<5028(N · m) 机型号:B/XJ6 选取
验算径向力	轴上负载径向力 当实际上无冲击及负载作用在低速轴轴伸中点上时 验算径向力 $F1=\frac{T}{R} \leq \frac{F12}{C1}$(N) 当有冲击及负载作用在低速轴轴伸中点以外时 验算径向力 $F1=\frac{T1}{R} \leq \frac{F12}{L1 \cdot C1 \cdot F1}$(N)	注: R: 链轮、皮带轮等节圆半径（m） F: 实际需用径向力(N) F12: 许用径向力（N） C1: 联接系数 F: 冲击系数 L1: 负载作用系数	•与使用设备联接方式：链轮链轮节 圆半径：R=0.10m 径向力作用位置：低速轴轴伸中点以外且有轻冲出 与电动机联接方式：弹性联轴器验算输出轴上径向力 $F1=\frac{T1}{R} \leq \frac{F12}{C1}$ $\frac{3800}{0.1} < \frac{51500}{1x1x1.2}$ = 42917 机型号：B/XJ6符合要求
	选定型号 ↓ 确定安装尺寸 → 确认润滑方式		输出轴方向：水平 结构型式：轴输入型 安装型式：D1安装 型号：XJ6-29-180° 安装尺寸：见外形尺寸表 润滑方式：油浴润滑

注：使用系数栏为※时，如电机满负荷运转，减速机会出现过载现象，在这种情况下，一定要在许用扭矩栏内所规定的额定转矩值内使用或增加过载保护装置。

Guidance of selection

Confirm load factor

The actual need torque T1 calculation → Load nature selected → Load coefficient selected

Note:
T1:actual need low speed shaft torque(N · m)
T2: low speed shaft allowable torque(N · m)

Selection one:

- T1:3800N.m
- Driving equipment:transport plane (feeding uniform) load property=II
- Running time:Countinuous8–10hours/days coefficient=1.2

Choose maxhine

Transmission raito selected i=n1/n2 → Modle selection guide → Confrim lode factor T,xlode≤T2

n1:input rotate soeed r/min
n2:Output rotate speed r/min
i:transmission ratio

- Output rotate speed n1:750r/min
  Input totate speed n2:25r/min
  Supply frenquency:50Hz
  I=N1/N2=750/25=30
- selection table by check:N2=26 N1=29
- 3800(N · m)x1.2<5028(N · m)
  Type:B/XJ6 selected

Checking radial force

Shaft load radial force

Note:
R:sorocket and pulley pitclt cirele raeliius(m)
Fr:actual need radial force(N)
Fr2:low speed shaft allowadle radial force(N)
Cf:connection coefficienrt
fs:impact coefficient
Lf:the load effect coefficient

When in fact no impact andload used in low speed shaftaxis halfway point out → Checking radial force $F1=\frac{T}{R}\leq\frac{F12}{C1}$ (N)

When in fact impact and load low speed shaft axis stretch beyond the halfway → Checking radial force $F1=\frac{T1}{R}\leq\frac{Ft2}{L1\cdot C1\cdot F1}$ (N)

- And use the equipmenr way this way:the sprocke
  The sprocket quarter circle radius:R=0.10m
  Radial force role position: low speed shaft axis streton beyond the halfway :point and lighl impact checking on low speed shaft radial force

$$\frac{T1}{R}\leq\frac{F2}{Cf}$$

$$\frac{3800}{0.1}=3800<\frac{51500}{1x1x1.2}=42917$$

Type:B/JXJ6 Size Up

Selected modle

Confirm Installation Method → Confirm lubrication methods

- Output direction: Horizonal
  Stuctural style: axis input
  Lnstallation type:D1 set up
  Hermal box position :180°
  type: BXJ6–28–180°
- set up size: Reference shape dimension table
- lubricating system:bath lubriciafion

Note:use coefficient colurmn,for,such as motor is tilled,slowdown,opportunity to appear overoad phenmenon.in this case must be in allowble torque column the rating of the provisions values increase in use or overload protection device.

单级直联型选型表（配4极电机）
Selection table for single stage reducer

P:输入功率 Input power　　K:使用系数Service factor
T2:输出扭矩Output torque　　Fr2:输出轴径向载荷 Radial load on outout shaft

电机频率：50Hz输入转速n1=1500r/min
Motor power:50Hz Input speed n1=1500/min

传动比i=9 Ratioi=9　　输出转速n2=167r/min Output speed n2=167r/min

功率P kw	许用转矩T2 N · m	使用系数 K	许用径向力Fr2 N	机型号 B/JXJ
0.37	19	2.03	1810	0
0.55	28	1.36	1810	0
		2.73	2050	1
0.75	38	1.00	1810	0
		2.00	2050	1
		5.00	3330	2
1.1	56	1.36	2050	1
		3.64	3330	2
1.5	77	1.00	2050	1
		2.67	3330	2
		5.00	4710	3
2.2	113	1.82	3330	2
		3.41	4710	3
3	155	1.33	3330	2
		2.50	4710	3
4	206	1.00	3330	2
		1.88	4710	3
5.5	284	1.36	4710	3
7.5	387	1.00	4710	3

传动比i=11 Ratioi=11　　输出转速n2=136r/min Output speed n2=136r/min

功率P kw	许用转矩T2 N · m	使用系数 K	许用径向力Fr2 N	机型号 B/JXJ
0.37	20	2.03	1940	0
0.55	34	1.36	1940	0
		2.73	2190	1
0.75	47	1.00	1940	0
		2.00	2190	1
		5.00	3560	2
1.1	69	1.36	2190	1
		3.64	3560	2
1.5	94	1.00	2190	1
		2.67	3560	2
		5.00	5060	3
2.2	139	1.82	3560	2
		3.41	5060	3
		5.00	6450	4
3	189	1.33	3560	2
		2.50	5060	3
		5.00	6450	4
4	252	1.00	3560	2
		1.88	5060	3
		4.25	6450	4
5.5	347	1.36	5060	3
		2.00	6450	4
		3.67	13380	5
7.5	473	1.00	5060	3
		1.47	6450	4
		3.67	13380	5
		4.00	35920	6
11	693	1.00	6450	4
		1.41	13380	5
		2.38	35920	6
15	945	1.23	13380	5
		2.00	35920	6
18.5	1166	1.00	13380	5
		1.47	35920	6

注:使用系数带※的型号，由于使用系数小于1，订货请咨询我司。
Note: for service factor with※,if motor is full load ,overload of reducer will occur under such circumstance.It must be used or added overloadig protector with nominal torqueaccording to permissible torque table.

电机频率：50Hz输入转速n1=1500r/min
Motor power:50Hz Input speed n1=1500r/min

传动比i=17 Ratio i=17　输出转速n2=88r/min Output speed n2=88r/min

功率P kw	许用转矩T2 N·m	使用系数 K	许用径向力Fr2 N	机型号 B/JXJ
0.37	32	2.03	2240	0
0.55	53	1.36	2240	0
		2.73	2530	1
0.75	73	1.00	2240	0
		2.00	2530	1
		5.00	4120	2
1.1	107	1.36	2530	1
		3.64	4120	2
1.5	146	1.00	2530	1
		2.67	4120	2
		5.00	5840	3
2.2	214	1.82	4120	2
		3.41	5840	3
		5.00	7460	4
3	292	1.33	4120	2
		2.50	5840	3
		5.00	7460	4
4	390	1.00	4120	2
		1.88	5840	3
		3.41	7460	4
5.5	536	1.36	5840	3
		2.00	7460	4
		3.67	15480	5
7.5	731	1.00	5840	3
		1.47	7460	4
		3.67	15480	5
		4.00	39196	6
11	1072	1.00	7460	4
		1.41	15480	5
		2.38	39196	6
15	1461	1.23	15480	5
		2.00	39196	6
18.5	1802	1.00	15480	5
		1.47	39196	6

传动比i=23 Ratio i=23　输出转速n2=65r/min Output speed n2=65r/min

功率P kw	许用转矩T2 N·m	使用系数 K	许用径向力Fr2 N	机型号 B/JXJ
0.37		2.20	2480	0
0.55	72	1.36	2480	0
		2.73	2810	1
0.75	98	1.00	2480	0
		2.00	2810	1
		3.67	4560	2
1.1	145	1.36	2810	1
		2.73	4560	2
1.5	198	1.00	2810	1
		2.00	4560	2
		3.67	6460	3
2.2	290	1.36	4560	2
		2.50	6460	3
		5.00	8250	4
3	395	1.00	4560	2
		1.83	6460	3
		5.00	8050	4
4	395	0.75※	4560	2
	527	1.38	6460	3
		2.75	8250	4
5.5	725	1.00	6460	3
		2.00	8250	4
		3.67	17120	5
7.5	725	0.73※	6460	3
	988	1.47	8250	4
		2.75	17120	5
		4.00	46140	6
11	1450	1.00	8250	4
		1.41	17120	5
		2.38	46140	6
15	1977	1.23	17120	5
		2.00	46140	6
18.5	2438	1.00	17120	5
		1.47	46140	6

注:使用系数带※的型号，由于使用系数小于1,订货请咨询我司。
Note:for service factor with※,if motor is full load，overload of reducer will occur under such circumstance.It must be used or added overloadig protector with nomianal torqueaccording to permissible torque table.

电机频率：50Hz输入转速n1=1500r/min
Motor power: 50Hz Input speed n1=1500r/min

传动比i=29 Ratio i=29　输出转速n2=51r/min Output speed n2=51r/min

功率P kw	许用转矩T2 N·m	使用系数 K	许用径向力Fr2 N	机型号 B/JXJ
0.37	54	1.49	2640	0
0.55	91	1.00	2640	0
		2.00	3020	1
0.75	125	1.47	3020	1
		2.93	4910	2
1.1	183	1.00	3020	1
		2.00	4910	2
1.5	185	0.73※	3020	1
	249	1.47	4910	2
		3.67	6960	3
2.2	370	1.00	4910	2
		2.50	6960	3
		5.00	8890	4
3	370	0.73※	4910	2
	499	1.83	6960	3
		3.67	8890	4
4	665	1.38	6960	3
		2.75	8890	4
5.5	914	1.00	6960	3
		2.00	8890	4
		2.92	18450	5
7.5	914	0.73※	6960	3
	1246	1.47	8890	4
		2.75	18450	5
		3.36	46600	6
11	1828	1.00	8890	4
		1.36	18450	5
		2.00	46600	6
15	2493	1.00	18450	5
		1.68	46600	6
18.5	3075	1.23	46600	6

传动比i=35 Ratio i=35　输出转速n2=43r/min Output speed n2=43r/min

功率P kw	许用转矩T2 N·m	使用系数 K	许用径向力Fr2 N	机型号 B/JXJ
0.37	74	1.49	2830	0
0.55	98	1.00	2830	0
	110	2.00	3220	1
0.75	150	1.47	3220	1
		2.00	5230	2
1.1	221	1.00	3220	1
		1.36	5230	2
1.5	223	0.73※	3220	1
	301	1.00	5230	2
		2.67	7420	3
2.2	301	0.68※	5230	2
	441	1.82	7420	3
		3.41	9470	4
3	301	0.50※	5230	2
	602	1.33	7420	3
		2.50	9470	4
4	802	1.00	7420	3
		1.88	9470	4
5.5	802	0.73※	7420	3
	1103	1.36	9470	4
		2.50	19650	5
7.5	1504	1.00	9470	4
		2.50	19650	5
		2.72	49670	6
11	1504	0.68※	9470	4
	2231	1.36	19650	5
		2.00	49670	6
15	3042	1.00	19650	5
		1.36	49670	6
18.5	3752	1.00	49670	6

注:使用系数带※的型号，由于使用系数小于1,订货请咨询我司。
Note:for service factor with※,if motor is full load，overload of reducer will occur under such circumstance.It must be used or added overloadig protector with nomianal torqueaccording to permissible torque table.

电机频率：50Hz输入转速n1=1500r/min
Motor power: 50Hz Input speed n1=1500r/min

传动比i=43 Ratio i=43		输出转速n2=35r/min Output speed n2=35r/min		
功率P kw	许用转矩T2 N·m	使用系数 K	许用径向力Fr2 N	机型号 B/JXJ
0.37	81	1.00	3030	0
0.55	136	1.36	3450	1
0.75	185	1.00	3450	1
		2.00	5600	2
1.1	185	0.68※	3450	1
	271	1.36	5600	2
1.5	185	0.50※	3450	1
	370	1.00	5600	2
		2.67	7940	3
2.2	370	0.68※	5600	2
	542	1.82	7940	3
		2.50	10140	4
3	370	0.50※	5600	2
	739	1.33	7940	3
		1.83	10140	4
4	986	1.00	7940	3
		1.38	10140	4
5.5	986	0.73※	7940	3
	1355	1.00	10140	4
		2.00	21040	5
7.5	1848	1.47	21040	5
		2.00	51500	6
11	2710	1.00	21040	5
		1.47	51500	6
15	3696	1.00	51500	6

传动比i=59 Ratio i=59		输出转速n2=25r/min Output speed n2=25r/min		
功率P kw	许用转矩T2 N·m	使用系数 K	许用径向力Fr2 N	机型号 B/JXJ
0.55	186	1.00	3860	1
0.75	186	0.73※	3860	1
	254	1.47	6260	2
1.1	186	0.50※	3860	1
	372	1.00	6260	2
1.5	372	0.73	6260	2
	507	1.47	8890	3
2.2	372	0.50※	6260	2
	744	1.00	8890	3
		1.82	11350	4
3	744	0.73※	8890	3
	1014	1.33	11350	4
4	744	0.55※	8890	3
	1352	1.00	11350	4
5.5	1352	0.73※	11350	4
	1859	1.36	23540	5
7.5	2536	1.00	23540	5
		2.00	51500	6
11	3719	1.47	51500	6
15	5072	1.00	51500	6

注:使用系数带※的型号，由于使用系数小于1,订货请咨询我司。
Note:for service factor with※,if motor is full load，overload of reducer will occur under such circumstance.It must be used or added overloadig protector with nomianal torqueaccording to permissible torque table.

电机频率：50Hz输入转速n1=1500r/min
Motor power:50Hz Input speed n1=1500/min

传动比i=71 Ratioi=71		输出转速n2=21r/min Output speed n2=21r/min		
功率P kw	许用转矩T2 N·m	使用系数 K	许用径向力Fr2 N	机型号 B/JXJ
0.55	224	1.00	4090	1
0.75	224	0.73※	4090	1
	305	1.47	6640	2
1.1	224	0.50※	4090	1
	448	1.00	6640	2
1.5	448	0.73※	6640	2
	610	1.47	9420	3
2.2	448	0.50※	6640	2
	895	1.00	9420	3
		1.82	12020	4
3	895	0.73※	9420	3
	1220	1.33	12020	4
4	1627	1.00	12020	4
5.5	1627	3.00	24950	4
	2237	1.36	24950	5
7.5	3051	1.00	24950	5
		1.36	51500	6
11	4475	1.00	51500	6

传动比i=87 Ratioi=87		输出转速n2=17r/min Output speed n2=17r/min		
功率P kw	许用转矩T2 N·m	使用系数 K	许用径向力Fr2 N	机型号 B/JXJ
0.75	374	1.00	7130	2
1.1	374	0.68※	7130	2
1.5	374	0.50※	7130	2
	748	1.00	10100	3
2.2	748	0.68※	10100	3
	1097	1.36	12920	4
3	748	0.50※	10100	3
	1496	1.00	12920	4
4	1496	0.75※	12920	4
5.5	2742	1.00	26780	5
7.5	3739	1.00	26780	5
		1.36	51500	6
11	5484	1.00	51500	6

注:使用系数带※的型号，由于使用系数小于1，订货请咨询我司。
Note: for service factor with※,if motor is full load ,overload of reducer will occur under such circumstance.It must be used or added overloadig protector with nominal torqueaccording to permissible torque table.

双级直联型选型表(配4极电机)
Selection table torque for double-stage reducer

电机频率：50Hz输入转速n1=1500r/min
Motor power: 50Hz Input speed n1=1500r/min

传动比i=21(11X11) 输出转速n2=12r/min
Ratio i=21(11X11) Output speed n2=12r/min

功率P kw	许用转矩T2 N·m	使用系数 K	许用径向力Fr2 N	机型号 B/JXJ
0.37	143	3.94	8000	20
0.55	212	2.66	8000	20
0.75	371	1.61	8000	20
	474	2.64	11340	31
1.1	695	1.39	11340	31
		2.27	14510	41
		2.27	14510	42
1.5	948	1.02	11340	31
		1.66	14510	41
		1.66	14510	42
2.2	1390	1.14	14510	41
		1.14	14510	42
		3.21	30080	52
3	1895	3.21	30080	53
		1.62	30080	52
		1.62	30080	53
4	2527	1.21	30080	52
		1.21	30080	53
		2.92	51500	63
5.5	3066	0.88※	30080	53
	3474	2.13	51500	63
7.5	4738	1.56	51500	63

传动比i=187(11X17) 输出转速n2=8r/min
Ratio i=187(11X17) Output speed n2=8r/min

功率P kw	许用转矩T2 N·m	使用系数 K	许用径向力Fr2 N	机型号 B/JXJ
0.37	220	2.73	8000	20
0.55	327	1.83	8000	20
0.75	732	1.71	11340	31
		3.42	14510	41
		3.42	14510	42
1.1	1074	1.16	11340	31
		2.33	14510	41
		2.33	14510	42
1.5	1250	0.85※	11340	31
	1464	1.71	14510	41
		1.71	14510	42
2.2	2148	1.16	14510	41
		1.16	14510	41
		1.96	30080	52
		1.96	30080	53
3	2929	1.44	30080	52
		1.44	30080	53
4	3905	1.41	30080	52
		1.41	30080	53
		2.56	51500	63
5.5	5369	1.86	51500	63
7.5	7322	1.37	51500	63

注:使用系数带※的型号，由于使用系数小于1,订货请咨询我司。
Note:for service factor with※,if motor is full load，overload of reducer will occur under such circumstance.It must be used or added overloadig protector with nomianal torqueaccording to permissible torque table.

电机频率：50Hz输入转速n1=1500r/min
Motor power: 50Hz Input speed n1=1500r/min

传动比i=289(17X17) 输出转速n2=5r/min
Ratio i=289(17X17) Output speed n2=5r/min

功率P kw	许用转矩T2 N·m	使用系数 K	许用径向力Fr2 N	机型号 B/JXJ
0.37	340	1.76	8000	20
0.55	506	1.19	8000	20
0.75	1132	1.10	11340	31
		2.21	14510	41
		2.21	14510	42
1.1	1660	1.51	14510	41
		1.51	14510	42
1.5	2263	1.10	14510	41
		1.10	14510	42
		2.21	30080	52
2.2	3319	1.51	30080	52
		1.51	30080	53
3	4217	0.93※	30080	52
		0.93※	30080	53
4	6035	1.66	51500	63
5.5	8292	1.21	51500	63
7.5	10000	0.88※	51500	63

传动比i=493(17X29) 输出转速n2=3r/min
Ratio i=493(17X29) Output speed n2=3r/min

功率P kw	许用转矩T2 N·m	使用系数 K	许用径向力Fr2 N	机型号 B/JXJ
0.37	581	1.03	8000	20
0.75	1930	1.30	14510	41
		1.30	14510	42
1.1	2500	0.88※	14510	41
		0.88※	14510	42
	2831	1.77	30080	52
1.5	3861	1.30	30080	52
2.2	5000	0.88※	30080	52
		0.88※	30080	53
4	10000	0.97※	51500	63

电机频率：50Hz输入转速n1=1500r/min
Motor power: 50Hz Input speed n1=1500r/min

传动比i=731(17X43) 输出转速n2=2r/min
Ratio i=731(17X43) Output speed n2=2r/min

功率P kw	许用转矩T2 N·m	使用系数 K	许用径向力Fr2 N	机型号 B/JXJ
0.75	2500	0.87※	14510	41
		0.87※	14510	42
	2862	1.75	30080	52
1.1	4198	1.17	30080	52
1.5	5000	0.87※	30080	52

传动比i=1003(17X59) 输出转速n2=1.5r/min
Ratio i=1003(17X59) Output speed n2=1.5r/min

功率P kw	许用转矩T2 N·m	使用系数 K	许用径向力Fr2 N	机型号 B/JXJ
0.75	3927	1.27	30080	52
1.1	5000	0.87※	30080	52

注:使用系数带※的型号，由于使用系数小于1,订货请咨询我司。
Note:for service factor with※,if motor is full load，overload of reducer will occur under such circumstance.It must be used or added overloadig protector with nomianal torqueaccording to permissible torque table.

摆线针轮减速机专用电机尺寸
Dimension of specialized motor for cycloid reducer

型号 Model	尺寸 Dimension	输入功率 (4极电机输入转速1400r/min) Input power (4poles,input speed 1400r/min)													
		0.37	0.55	0.75	1.1	1.5	2.2	3.0	4.0	5.5	7.5	11	15	18.5	22
0	摆线专用电机长度L2(mm) specialized motor length L2(mm)	225	245	245											
	摆线专用电机重量(kg) specialized motor weight (kg)	11	15	17											
1	摆线专用电机长度L2(mm) specialized motor length L2(mm)		255	255	270	305									
	摆线专用电机重量(kg) specialized motor weight (kg)		17	18	22	27									
2	摆线专用电机长度L2(mm) specialized motor length L2(mm)			255	270	305	325	325	340						
	摆线专用电机重量(kg) specialized motor weight (kg)			18	22	27	36	38	45						
3	摆线专用电机长度L2(mm) specialized motor length L2(mm)						325	325	340	350	420				
	摆线专用电机重量(kg) specialized motor weight (kg)						36	38	52	68	80				

普通电机法兰连接型的法兰尺寸
Flange size for ordinaty motor with flange

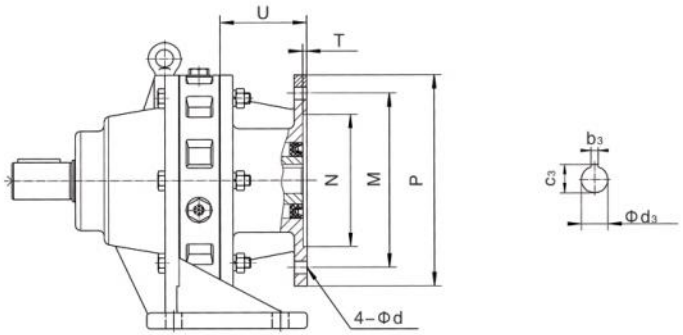

机座号 Base No.	法兰型号 Flange Model	P	M	N	T	d	u	d3										b3	c3
								9	11	17	23	29	35	43	59	71	87		
0#	71B5	160	130	110	5	9	70	14	14	14	14	14	14	14	-	-	-	5	16.3
	80B5	200	165	130	5	11	70	19	19	19	19	19	19	19	-	-	-	6	21.8
	90B5	200	165	130	5	11	70	24	24	-	-	-	-	-	-	-	-	8	27.3
1#	80B5	200	165	130	4	11	81	19	19	19	19	19	19	19	19	19	-	6	21.8
	90B5	200	165	130	4	11	81	24	24	24	24	24	24	-	-	-	-	8	27.3
	100/112B5	250	215	180	5	13.5	93	28	28	28	28	-	-	-	-	-	-	8	31.3
2#	80B5	200	165	130	5	11	89	19	19	19	19	19	19	19	19	19	19	6	21.8
	90B5	200	165	130	5	11	89	24	24	24	24	24	24	24	24	-	-	8	27.3
	100/112B5	250	215	180	5	15	89	28	28	28	28	28	-	-	-	-	-	8	31.3
3#	90B5	200	165	130	7	12	91.5	24	24	24	24	24	24	24	24	24	24	8	27.3
	100/112B5	250	215	180	7	14	91.5	28	28	28	28	28	28	28	28	28	-	8	31.3
	132B5	300	265	230	5	14	91.5	38	38	38	38	38	-	-	-	-	-	10	41.3
4#	100/112B5	250	215	180	5	15	89	28	28	28	28	28	28	28	28	28	28	8	31.3
	132B5	300	265	230	5	15	89	38	38	38	38	38	38	38	-	-	-	10	41.3
	160B5	350	300	250	7	19	109	42	42	42	42	-	-	-	-	-	-	12	45.3
5#	132B5	300	265	230	7	15	92	38	38	38	38	38	38	38	38	38	38	10	41.3
	160B5	350	300	250	7	19	122	42	42	42	42	42	42	42	-	-	-	12	45.3
	180B5	350	300	250	7	19	122	48	48	48	-	-	-	-	-	-	-	14	51.8
6#	132B5	300	265	230	7	15	89	38	38	38	38	38	38	38	38	38	38	10	41.3
	160B5	350	300	250	7	19	119	42	42	42	42	42	42	42	42	42	42	12	45.3
	180B5	350	300	250	7	19	119	48	48	48	48	48	48	48	-	-	-	14	51.8

电动机型号参数表
Motor coefficent tables

注：
4级三相异步电动机同步转 1500r/min、380V/50Hz
6级三相异步电动机同步转速 1000r/min、380V/50Hz

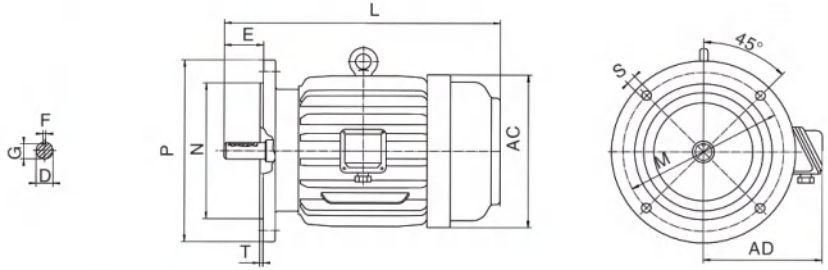

机座号 Base No	4极	6极	外型尺寸 Outline dimension			安装尺寸 Mounting dimension					轴伸尺寸 Shaft extension dimension			
	kw	kw	AC	AD	L	ΦP	ΦM	ΦN	T	ΦS	E	F	ΦD	G
71M	0.25	0.18	140	80	255	160	130	110	3.5	10	30	5	14	11
	0.37	0.25												
80M	0.55	0.37	155	145	295	200	165	130	3.5	12	40	6	19	15.5
	0.75	0.55												
90S	1.1	0.75	175	155	320	200	165	130	3.5	12	50	8	24	20
90L	1.5	1.1			345	200	165	130	3.5	12	50	8	24	20
100L	2.2	1.5	195	180	385	250	215	180	4	15	60	8	28	24
	3													
112M	4	2.2	215	190	400	250	215	180	4	15	60	8	28	24
132S	5.5	3	260	210	470	300	265	230	4	15	80	10	38	33
132M	7.5	4	260	210	510	300	265	230	4	15	80	10	38	33
		5.5												
160M	11	7.5	315	255	615	350	300	250	5	19	110	12	42	37
160L	15	11			670	350	300	250	5	19	110	12	42	37
180M	18.5		350	280	700	350	300	250	5	19	110	14	48	42.5
180L	22	15			740	350	300	250	5	19	110	14	48	42.5
200L	30	18.5	395	305	770	400	350	300	5	19	110	16	55	49
		22												

润滑、使用与维护
Ludricant、Vsage&Maintainance

1、润滑方式

	机型	0	1	2	3	4	5	6		
单级	卧式	油 浴 式				油浴式/油泵润滑				
	立式	油 浴 式				油浴式/油泵润滑				
双级	机型	10	20	30	31	41	42	52	53	63
	卧式	油 浴 式				油浴式/油泵润滑				
	立式	油 浴 式				油浴式/油泵润滑				

2、本机在出厂时已加入润滑油，使用前不必再加润滑油；
3、在常温下可选用40#或50#机械油，也可以选用更好的70#或90#极压工业齿轮油；
4、润滑方式请参照安装型式，不是所有的4#\5#\6#摆线减速机都是油泵循环润滑；
5、油泵循环润滑式，要注意开机前先启动油泵电机，视油泵是否供油，否则应将油泵电机接线换相，油泵的过滤器要注意清洗以防堵塞；
6、换油制度：第一次加油动转一个月交换机油，并将内部油污冲净。以后可每隔3–6月交换一次。如工作环境恶劣，尽可能缩短换油时间。长时间没有使用的减速机重新开机，必须先更换润滑油。

1. Method of lubrication

	type	0	1	2	3	4	5	6		
Single reducer	horizontal mounted	Oil dath type				Oil dath type/Oil pump lubrication				
	Vertical mounted	Oil dath type				Oil dath type/Oil pump lubrication				
Double –stage Reducer	type	10	20	30	31	41	42	52	53	63
	horizontal mounted	Oil dath type				Oil dath type/Oil pump lubrication				
	Vertical mounted	Oil dath type				Oil dath type/Oil pump lubrication				

2.The machine in the factory,has joined lubricating oil,before using don’t haveto add the lubricating oil;
3.At room temperature,choose 40 or 50# JiXieYou,also can choose better70#or90# extreme pressure industry with round the oil;
4.Lubrication methods please refer to install type,not all4#,5#,6#cycloid reducer is lubrication oil pump cycle;
5.Oil pump cycle lubrication type,must pay attention to start before starting the oil pump motor,depending on whether, the oil pump oil supply,or should be the oil pump motor wiring commutation,because the oil pump is assigned the func–tioning of.the direction,and to pay attention to cleaning of oil pump filter jam incase;
6.Oil system:first come on a month regulated exchange the oil,and the internal oil Wu rinse.But after every three to six months exchange a.Such as working conditions,shorten the time as far as possible for oil.Long time no use of the d–eceleration machine to boot,must first change lubricating oil.

摆线系列针轮减速机加油量（单位：L）
Fill oil quantity（unit: L）

型号	B0 JXJ0	B1 JXJ1	B2 JXJ2	B3 JXJ3	B4 JXJ4	B5 JXJ5	B6 JXJ6		
卧式	0.25	0.45	0.85	1.4	3.5	4.5	7		
立式	0.3	0.5	1.2	1.8	3	6	11		
型号	B10 JXJ10	B20 JXJ20	B21 JXJ21	B31 JXJ31	B41 JXJ41	B42 JXJ42	B52 JXJ52	B53 JXJ53	B63 JXJ63
卧式	0.5	0.85	1.2	1.8	4	4	6	6	9
立式	0.6	0.85	1.5	2.2	4	4.2	7	8	13

如不能准确把握加油量，请以油镜中心为准。

推荐用润滑油牌号
Lubricant brand recommended

环境温度 Ambient temperature	国际 Chinese standard GB/T5903 中级工业齿轮油Medium super pressure industrial gear oil	埃索 ESSO Spartanep	壳牌 Sheel Omala	美孚 Mobil	嘉德士 Caltex Meropa	英国石油 BP Energol	海湾 Gulf EP
-10℃ ~ 5℃	L-CKC68	EP68	68	626 ISO.VG68	68	GR-XP68	HD 68
0℃~35℃	L-CKC100 L-CKC150	EP 100 EP 150	100 150	627 ISO.VG100 629 ISO.VG150	100 150	GR-XP100 GR-XP150	HD 100 HD 150
30℃~50℃	L-CKC220 L-CKC320 L-CKC460	EP 220 EP 320 EP 460	220 320 460	630 ISO.VG220 632 ISO.VG320 630 ISO.VG320 634 ISO.VG460	220 320 460	GR-XP220 GR-XP320 GR-XP460	HD 220 HD 320 HD460

一般故障及排除方法

故障		可能的原因	处理方法
漏油	输入，输出轴部漏油	油封损伤	更换油封
	针齿壳，机座部处漏油	螺栓松动	扭紧螺栓
	油漏入电机内部	油封损伤	更换油封
		注油过多	放油
电动机在运转而输出不转		键损坏	确认后与本公司联系
温度剧烈上升		负荷过大	按规定降低负荷
		电压下降或升高	与电力公司联系
		使用场所的温度高	改变通风方法等
		轴承受损	更换轴承
		摆线轮异常磨损	更换摆线轮
有异常声音，震动非常大		轴承内有异物，已损伤	更换轴承
		摆线轮齿面夹有异物	除掉异物看是否有损伤
		摆线轮齿面损失	更换摆线轮
		因安装面不平，台架歪斜	把安装台整平
		安装台刚性不足引起共振	加固安装台，提高刚性
		与主机轴不同心	使轴线同心
		主机的振动传递过来	单独动转减速机，查明声源

Failure and solutions

Failure		Reason	Solutions
Oil leak–age	Oil leakage from input Or output shaft	Oil seal wore out	Replace oil seal
	Oil leakage from pin wheel Housing the base	Bolt loosebess	Tighten bolt
	Oil leakage into motor	Oil seal wore out	Replace oil seal
		Excess oil	Oil discharge
Motor running,but output shaft don't run		Key wore out	Contact us after confirmation
Overheating		Overloading	Reduce the load
		Voltage down or up	Contact with the Electric power company
		High temperature in working Condition	Change the ventilation method,etc.
		Bearing wore out	Replace bearing
		Cycloid gear wore out	Replace the cycloidal gear
Noise,big vibration		Foreign objects in bearing. Wore out	Replace bearing
		Foreign objects in the Surface of cycloid gear	Remove objects and check ifwear out
		The surface of cycloid gear Wore out	Replace the cycloid gear
		Bease lean due to uneven Mounting suface	Level offmounting platform
		Not enough rigidity of install Platform cause resonance.	Strengthen the install platform. Improve the rigidity.
		Not concentric with the main shaft	Concentric with the main shaft
		Vibration from main engine	Run reduce independently. check noise source

备忘录

星光传动 STARSHINE DRIVE

备忘录

星光传动
STARSHINE DRIVE

备忘录

星光传动
STARSHINE DRIVE