芯谷微电子
IC VALLEY Microelectronics

IPA-2040C

GaAs MMIC Power Amplifier, 20-40GHz

Features:

Freq. Range: 20-40GHz
Gain: 21dB
Gain Flatness: ≤±0.75dB
NF: 7.0dB typ.
P-1dB: 22dBm
Psat: 23dBm
Supply: +5V/180mA
50Ohm Input/Output
100% On Wafer Test
Size: 1.85 x 1.05 x 0.1mm

Functional Diagram:

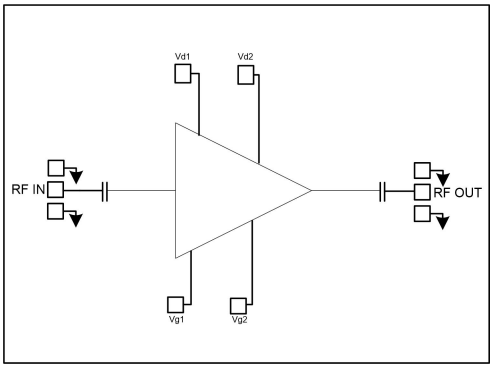

Product Introduction:

IPA-2040C is a wideband amplifier based on GaAs technology, with a frequency range of 20-40GHz, a gain of 21dB, and a saturated output power of 23Bm. The chip uses +5V power supply. The chip via metallization process ensures good grounding, and the back side is metallized, which is suitable for eutectic sintering or conductive adhesive bonding process.

Abosulte Maximum Ratings[1]

Maximum Vdd	+7V
Maximum Gate Bias	-3V
Maximum Input Power	+20dBm
Working Temperature	-55 ~ +85°C
Storage Temperature	-65 ~ +150°C

【1】Exceeding any of the above maximum limits may cause permanent damage.

Electrical Specifications(T_A= +25°C, Vd=+5V)

Parameter	Min.	Typ.	Max.	Units
Freq. Range		20-40		GHz
Gain	20	21	23	dB
Gain Flatness		±0.75		dB
P-1dB		22		dBm
Psat		23		dBm
Input Return Loss	16	21	-	dB
Output Return Loss	12	14	-	dB
Current		180		mA

Block E, Provincial Science and Technology Achievement Transformation Base, No. 425, Chuangxin Avenue, Shushan District, Hefei City, Anhui Province.
0551-65538008
www.ic-valley.com

GaAs MMIC Power Amplifier, 20-40GHz

Test Curve（The following data is based on probe testing）

Gain vs. Freq.

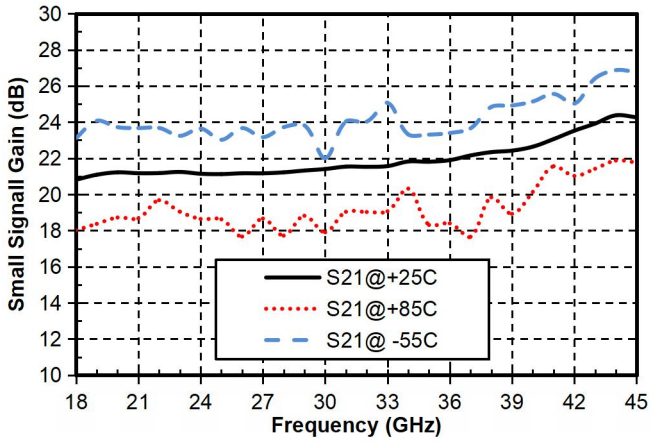

Reverse Isolation vs. Freq.

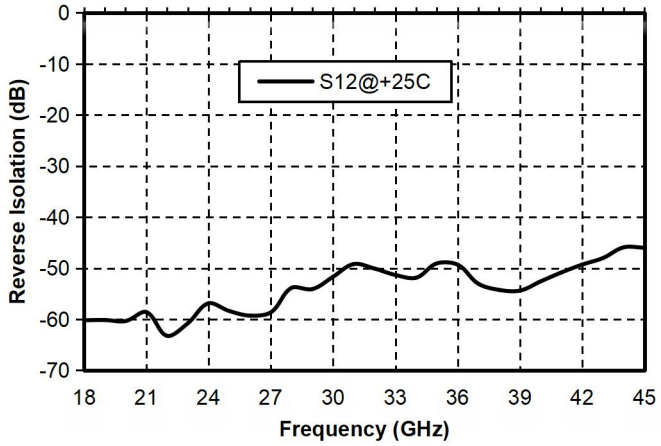

Input Return Loss vs. Freq.

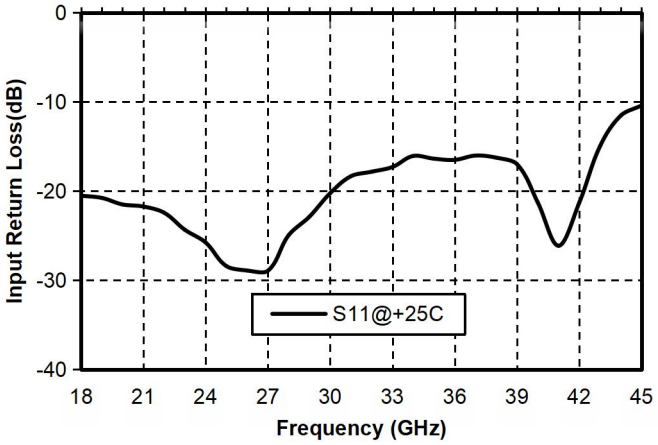

Output Return Loss vs. Freq.

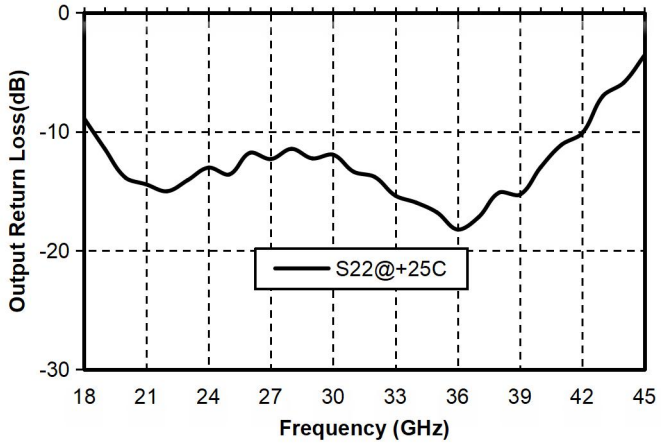

P-1dB vs. Freq.

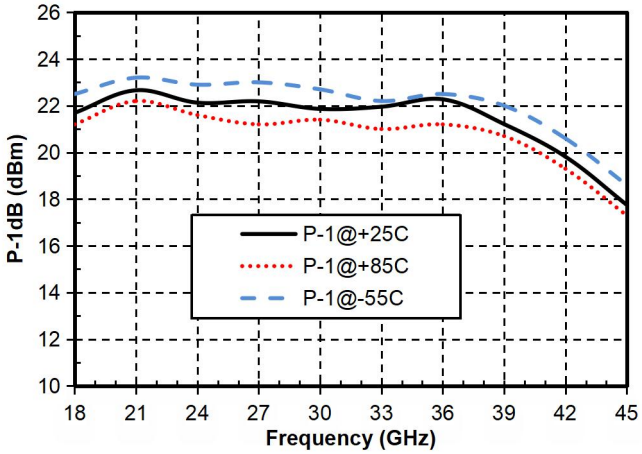

Psat vs. Freq.

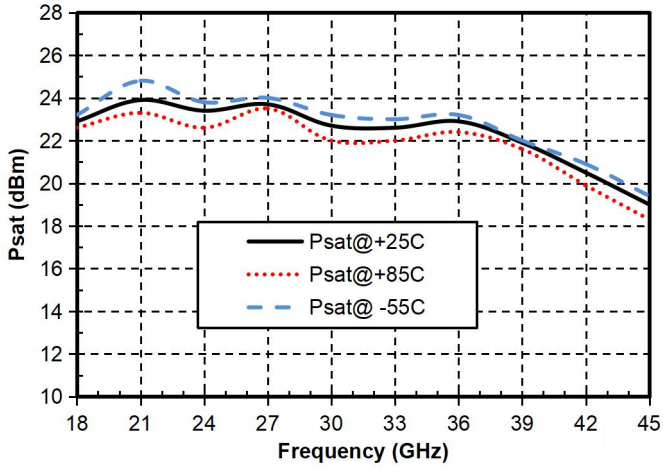

GaAs MMIC Power Amplifier, 20-40GHz

Outline Drawing[2]

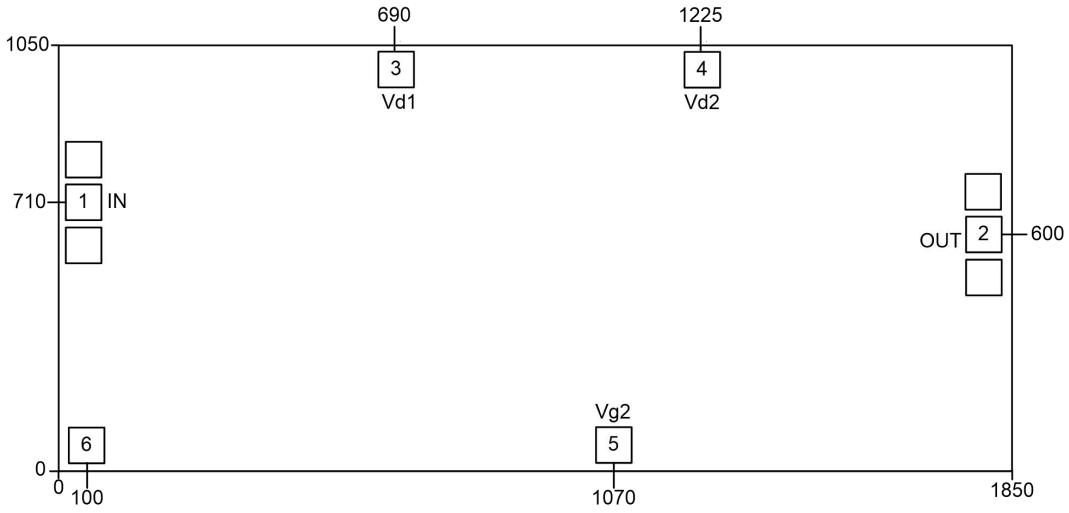

【2】The units in the figure are all microns.

Pad Descriptions

Pad Number	Function Symbol	Description
1	RF IN	RF signal input terminal, no DC blocking capacitor is required
2	RF OUT	RF signal output terminal, no DC blocking capacitor is required
3、4	Vd1、Vd2	Amplifier drain bias voltage, an external bypass capacitor of 100pF, 1000pF, 100nF is required
5、6	Vg1、Vg2	Amplifier gate bias voltage, an external bypass capacitor of 100pF, 1000pF, 100nF is required
Bottom of the chip	GND	Bottom of the chip needs to be well grounded with RF and DC
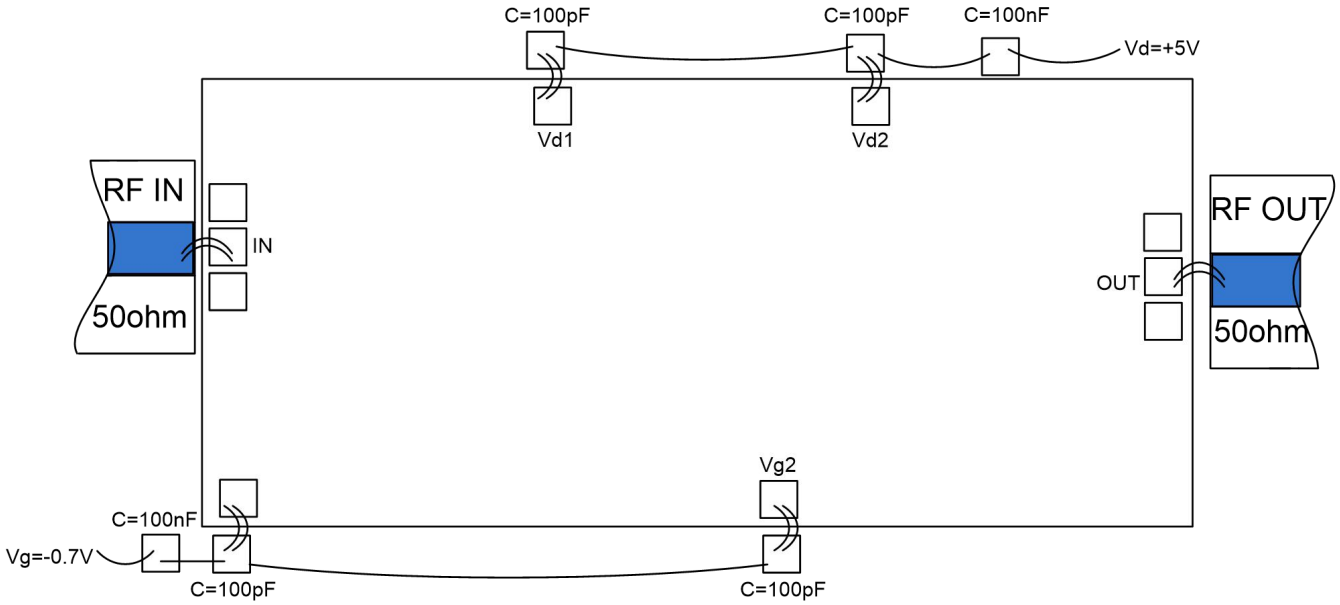
Recommended assembly drawing