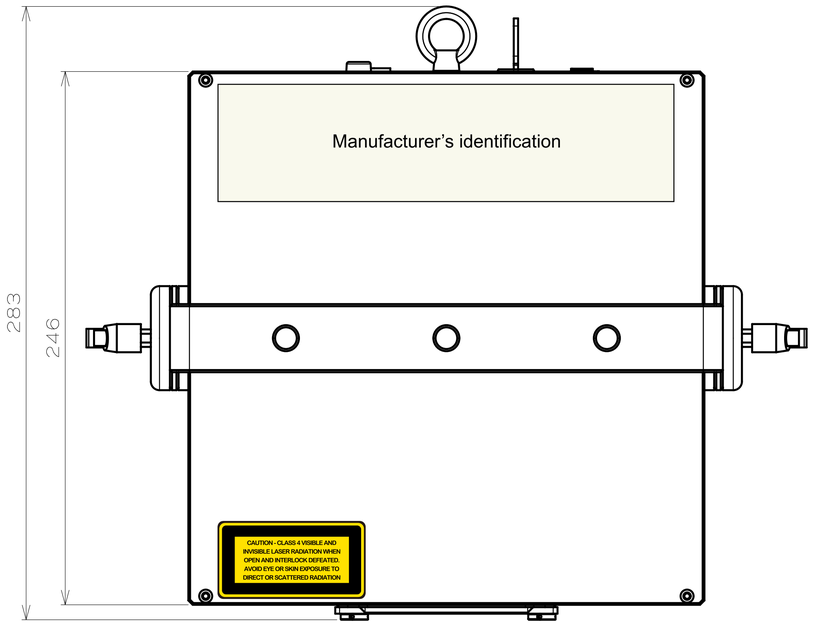

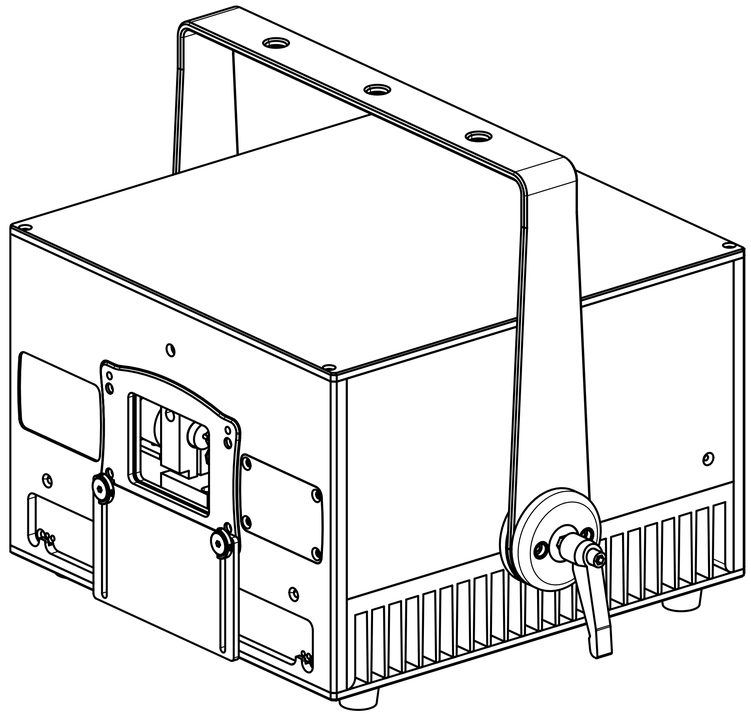

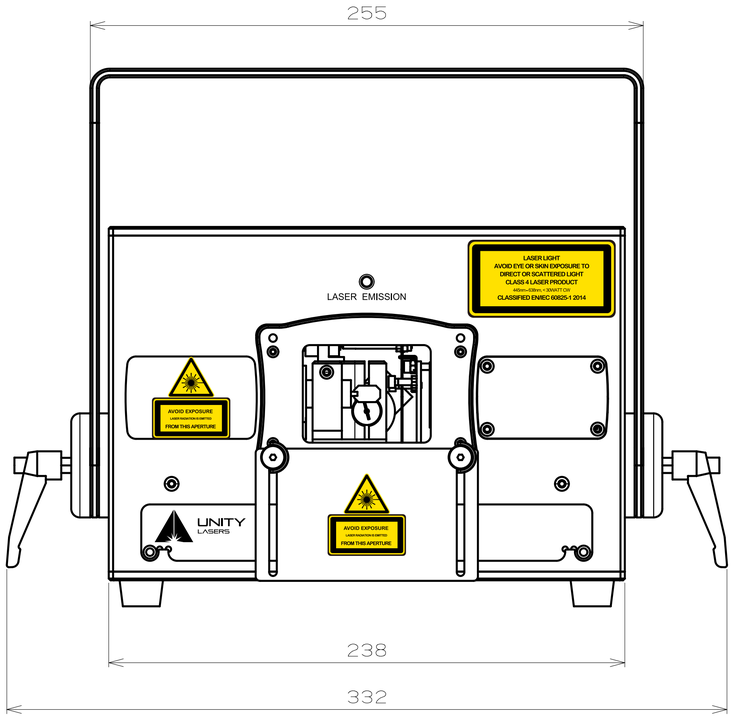

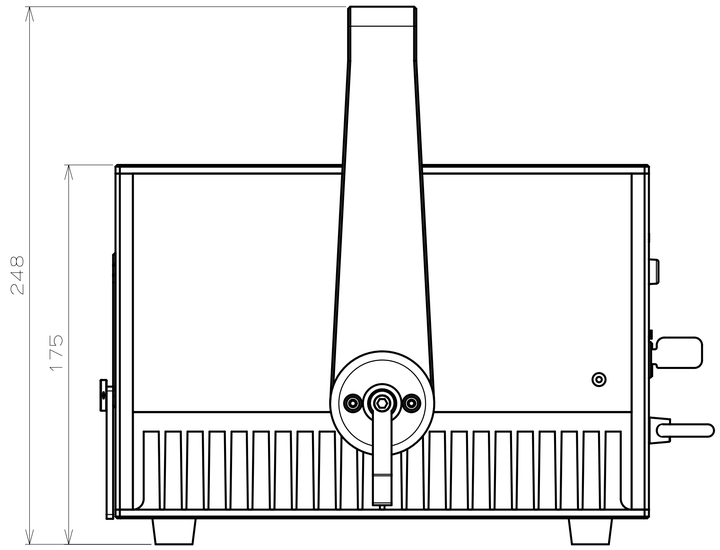

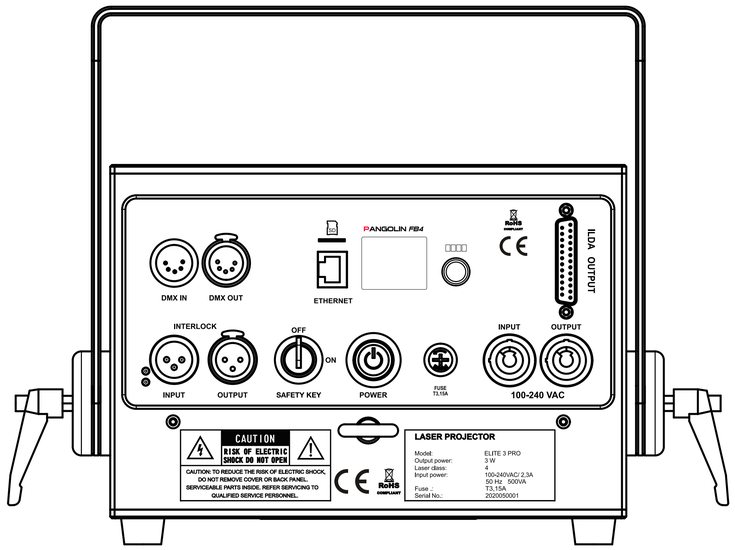

DO NOT MEASURE FROM THIS DRAWING.

MA204 - A