OKTECH

JW7627(A) EXPLOSION-PROTECTED MULTIFUNCTIONAL FLASHLIGHT

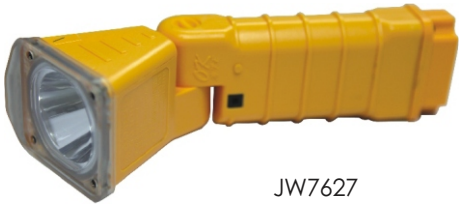

JW7627

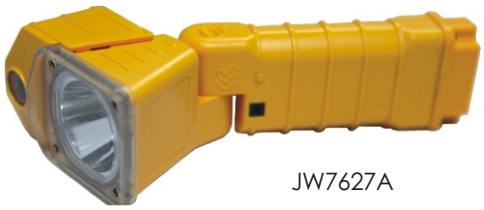

JW7627A

- Suitable for use in Zone 1 and Zone 2
- Designed to be carried by hand, worn against the breast or waist
- Indication of available battery capacity
- Robust PC housing, low weight and impact resistance
- Fitted with HD camera, with 1080P resolution

COMPONENTS

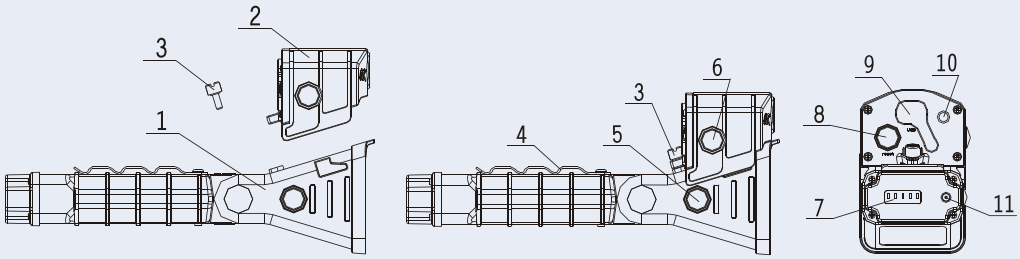

1. Flashlight
2. Camera
3. Screw
4. Clip
5. Lighting on/off
6. Video on/off
7. Battery capacity indication
8. Reset
9. Data port
10. Video indicator
11. Charging port

APPLICATION

OKTECH

TECHNICAL SPECIFICATION

CERTIFICATION & APPROVALS

CQST E x i b IIC T 4 Gb

MATERIALS

Enclosure	Polycarbonate
Transparent cover	Polycarbonate

ELECTRICAL PARAMETER

Input	100V - 240V AC 50Hz / 60Hz
Output	3.7 V DC
Ambient temperature	-20 °C to +40 °C
Degree of protection	IP66 / IP67

BATTERY

Type	Lithium battery
Capacity	4 Ah
Battery life	1000 cycles
Charging time	9 h
JW7617 duration	⩾10h (srtong light)/⩾17h (working light)
JW7627A duration	⩾8h (video)/ ⩾8h (video+working light)/ ⩾4h (video+strong light)

LAMP

Type	LED
Watts	3 W
Luminous flux	90 lm (working light)
	125 lm (strong light)
Lamp life	100000 h
Flash frequency	8 Hz -10 Hz

CONFORMITY TO STANDARDS

IEC60598

Dimensions in mm

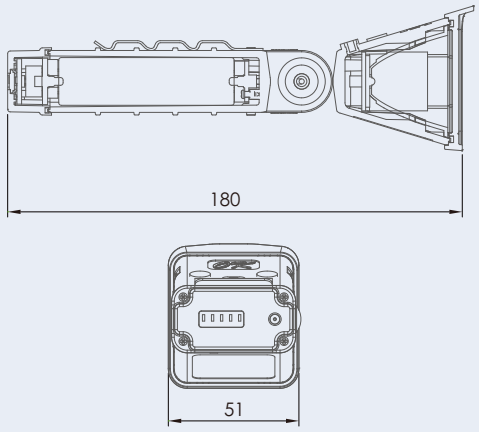

CAMERA

Camera	8 MP
Resolution	1080 P
Storage	⩾32 GB

SELECTION TABLE

Designation		Weight
JW7627	LED	0.26 kg
JW7627A	LED with camera	0.31 kg

Product design and specifications are subject to change without notice, please check the OKTECH website for latest specifications.