深圳优博胜电子有限公司

Shenzhen UPSEN Electric CO., LTD.

User Manual

High Frequency Online UPS Queen Star Series
3 Phase 10K-40KVA

THANKS

Thank you for purchasing our UPS, it is safe and reliable, needs few maintenance.

This manual includes instructions of safety installation and operations, they help your UPS to have the longest service life. This manual also accounts the UPS work principle and relative functions.

Please obey the instructions and notes stated in this manual. Keep this manual in a safe place, consult it before operation.

Note: The company reserves the right to make changes to product described in this manual at any time and without notice for reason of improvement.

Contents

1. Safety

There presents high temperature and voltage in UPS, please obey local safety rule while installing, operating or maintaining UPS. Abnormal operations may result in electric shock or equipment damage.

1.1 Safety notes:

1. Even if not connected to main power, high voltage may still presents at UPS outlets.
2. Don't dispose of battery or batteries group in fire, otherwise, it can cause explosion and harm to people. Don't open or do damage to the battery, for the liquid spilled from battery is strongly poisonous and do harm to body.
3. Please avoid short-circuit between battery anode and cathode, otherwise, this will cause electric shock or fire.
4. Don't dismantle the UPS cover, there is danger of electric shock.
5. Don't touch batteries. Batteries are not isolated with the input circuit, there is high voltage between the battery terminals and ground.

Warning:

This product belongs to the C3 type of UPS, used in the second class environment in commercial and industrial applications. May need to install restrictions or additional measures to restrain disturb.

1.2 Description of commonly used symbols

The following symbols will be used in this manual and may appear during the course of your practical applications. Therefore, all users should be familiar with them and understand their meanings.

Notation and Explanation			
Notation	Explanation	Notation	Explanation
	Alert you to pay special attention		Protective ground
	Caution of high voltage		Alarm silence
	Turn on the UPS		Overload indication
	Turn off the UPS		Battery check
	Idle or shut down the UPS		Recyclable
	Alternating current source (AC)		Do not dispose with ordinary trash
	Direct current source (DC)		Battery

2. Introduction

2.1 System and model description

The On-Line-Series is an uninterruptible power supply incorporating double-converter technology. It provides perfect protection specifically for strict load. The double-converter principle eliminates all mains power disturbances. A rectifier converts the alternating current from the socket outlet to direct current. This direct current charges the batteries and powers the inverter. In the event of power failure, the maintenance-free batteries power the inverter. Thus the inverter generates a sine wave AC power, which permanently supplies the loads.

Designed with the proven on-line, double conversion architecture, this series of UPS offers the greatest degree of availability in power protection and provides continuous high-quality AC power to connect strict load, especially for the basic equipments in some areas as: finance, communication, government, traffic, manufacture, education and so on.

This manual is applicable to the following models:

Type		Model	Input	Battery
Standard	10KVA	33 10K	Three-phase + N + PE	Inbuilt
	20KVA	33 20K	Three-phase + N + PE	Inbuilt
Long back up time	10KVAL	33 10KL	Three-phase + N + PE	External battery bank
	20KVAL	33 20KL	Three-phase + N + PE	External battery bank
	30KVAL	33 30KL	Three-phase + N + PE	External battery bank
	40KVAL	33 40KL	Three-phase + N + PE	External battery bank

2.2 Functions

★ **Three-in-three-out UPS**

33Q 10KL-40KL UPS is big power three-in-three-out UPS, whose load can be completely imbalance between three phases. When the output connects imbalance loads, the input currents of three phases are mutually balanced, so the burden of three phases electric net are balanced.

★ **Digital control**

Each part of this UPS is implemented under digital control. The advantage is avoid the risk of analog component invalidation, make the performance and the control system more excellent, steady and credible.

★ **N+X parallel redundancy**

33Q 10KL-40KL UPS adopts N+X parallel redundancy design, user can set different redundancy degree according to the important degree of the load. While the redundancy module attain above two, the dependability of UPS system achieve 99.999%, satisfying the reliability require of aviation and finance industry, etc.

★ **PFC soft switch**

33Q 10KL-40KL Using the cutting edge of PFC soft switch technology, improve the system of the power grid environment adaptability, system stability is higher, and to reduce the failure rate of the system and the machine efficiency is higher than 93%, more energy conservation and environmental protection.

★ **Intelligent monitor function**

A local monitor software CD is configured for 33Q 10KL-40KL UPS, UPS is monitored through RS232 wire conveniently. Remote monitor is feasible when SNMP card or RS485 convert card is chosen.

★ **Maintain bypass**

This UPS provide maintain bypass function. Technician can fix the cabinet interior online by switching to bypass when emergency situation happens.

★ **All-purpose UPS**

33Q 10KL-40KL UPS support frequency conversion, it can be used as a transducer.

2.3 Appearance

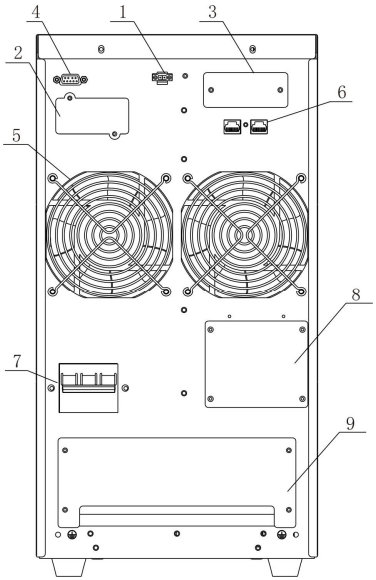

33Q 10KL BACK VIEW

1. EPO Emergency shutdown switch
2. SNMP card
3. Parallel board install position
4. RS232 communication interface
5. FAN
6. RJ45
7. Input breaker
8. Wiring installation
9. Terminal block

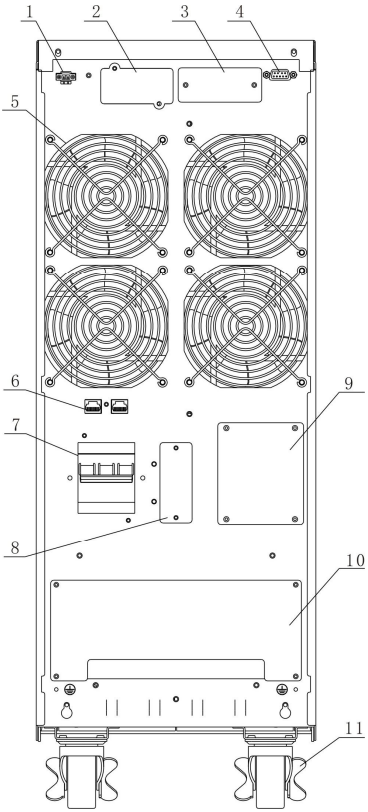

33Q 10K/33 20K(L)/33 30KL/33 40KL BACK VIEW

1. EPO Emergency shutdown switch
2. SNMP card
3. Parallel board install position
4. RS232 communication interface
5. FAN
6. RJ45
7. Input breaker
8. Battery connect position
9. Wiring installation
10. Terminal block
11. Wheel

3. Installation

3.1 Unpacking and inspection

1. Check if the equipment is just what you wanted to purchase, you can affirm through inspecting the model NO on back panel of the equipment.
2. Unpack the packaging and check the package contents. The shipping package contains:

★ A UPS

★ A user manual and a CD

★ A communication cable

★ Long back up time UPS have one battery cable.

3. Inspect the appearance of the UPS to see if there is any damage during transportation. Do not turn on the unit and notify the carrier and dealer immediately if there is any damage or lacking of some parts.
4. To unpacking the top of the plate structures in the whole machine packaging wood base, the machine can be launched along the slope, the diagram below:

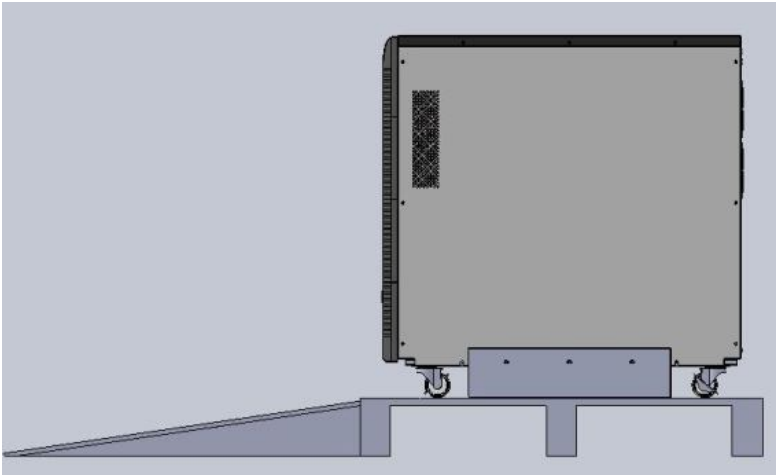

3.2 Installation notes

1. Consider the convenience of operation and maintain, the space in front and back of the cabinet should be 100cm and 80cm respectively.
2. Keep good air circulation around UPS and far away from water, flammable gas and corrosive.
3. The environment temperature around UPS should keep in a range of 0℃～40℃. If the environment temperature exceed 40℃, the rated load capacity

should reduced by 12 percent per 5℃. The max temperature can't be higher than 50℃.

4. There will be phenomena of condensing if the equipment is dismantled or installed under low temperature. The equipment can't be installed unless it is full dry at internal and external of the equipment. Otherwise, there will be danger of electric shock.
5. Battery group is advised used between 15℃～25℃. Don't place UPS on the slope and there should keep good air circulation between in-went on front panel bottom and fan out-vent on rear panel.
6. Use a standard RS232 communication wire to connect the RS232 port and the same port in computer, then install the software in the computer to implement monitor of this UPS.

3.3 Installation

Installation and wiring must be performed in accordance with the local electric code and the following instructions by professional personnel. For safety, please cut off the mains power breaker before installation. The battery breaker also needs to be cut off if it is a long backup time model.

1. Open the terminal block cover located on the rear panel of the UPS (please refer to the appearance diagram).
2. The input and output wires connect to the UPS must accord with follow sheet:

Model	33Q 10K(L)	33Q 20K(L)	33Q 30KL	33Q 40KL
Firing line	14AWG (2.5 mm^2)	10AWG (4mm^2)	8AWG (6mm^2)	6AWG (16mm^2)
Zero line	10AWG (4 mm^2)	8AWG (6 mm^2)	6AWG (16mm^2)	4AWG (25mm^2)
Ground line	10AWG (4 mm^2)	8AWG (6 mm^2)	6AWG (16mm^2)	4AWG (25mm^2)

Note:
Do not use the wall receptacle as the input power source for the UPS, as its rated current is less than the UPS's maximum input current. Otherwise the receptacle may be burned and destroyed.

3. Connect the input and output wires to the corresponding input and output terminals according to the following diagram.

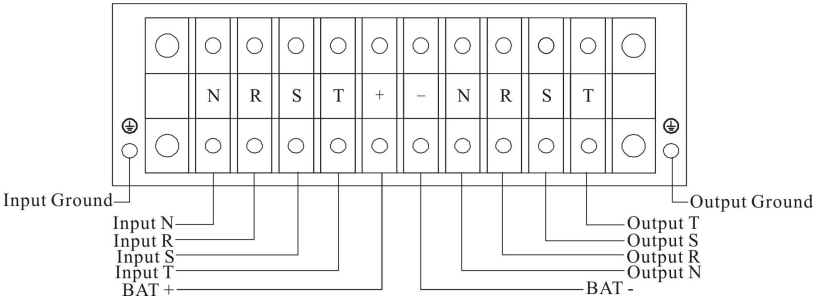

Input and Output Terminal Block wiring diagram of 33Q 10KL

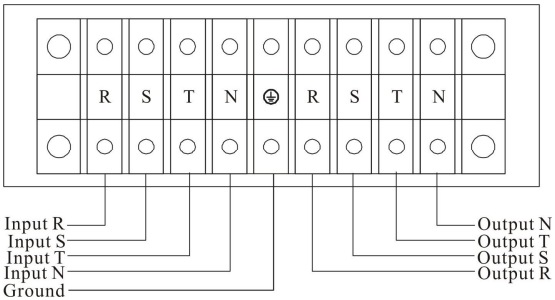

Input and Output Terminal Block wiring diagram of 33Q 10K/33 20K(L)/ 33Q 30KL/33 40KL

Note:

You must make sure that the input and output wires and the input and output terminals are connected tightly.

4. After having completed the installation, make sure the wiring is correct.
5. Please install the leak current protective breaker at the output power distribution panel of the UPS if necessary.
6. To connect the load with the UPS, please turn off all the loads first, then perform the connection and finally turn on the loads one by one.
7. No matter the UPS is connected to the utility power or not, the output of the UPS may have electricity. The parts inside the unit may still have hazardous voltage after turning off the UPS. To make the UPS have no output, power off the UPS, and then disconnect the utility power supply.
8. Suggest charging the batteries for 8 hours before use. After connection, turn the input breaker in the “ON” position, the UPS will charge the batteries automatically. You can also use the UPS immediately without charging the batteries first, but the backup time may be less than the standard value.

9. If it is necessary to connect the inductance load such as a monitor or a laser printer to the UPS, the start-up power should be used for calculating the capacity of the UPS, as its start-up power consumption is too big when it is started.

3.4 Operating procedure for connecting the long backup time model UPS with the external battery

1. The nominal DC voltage of external battery pack is 192VDC for 33Q 10K, and 240VDC for 33Q 20K, 384VDC for 33Q 30K/40K. Each battery pack consists of 16 /20/32 pieces of 12V "maintenance-free" batteries in series. To achieve longer backup time, it is possible to connect multi-battery packs, but the principle of "same voltage, same type" should be strictly followed.
2. For 33Q 10-40K UPS, the procedure of installing battery bank should be complied with strictly. Otherwise you may encounter the hazardous of electric shock.

★ A DC breaker must be connected between the battery pack and the UPS. The capacity of breaker must be not less than the data specified in the general specification as follow.

Model	33Q 10KL	33Q 20KL	33Q 30KL	33Q 40KL
Battery voltage	192VDC	240VDC	384VDC	384VDC
Battery current	55.5A	89A	83A	111A

★ Set the battery pack breaker in "OFF" position and connect the 16、20 or 32 pieces of batteries in series. And the battery wires must be follow the sheet need:

Model	33Q 10K(L)	33Q 20K(L)	33Q 30KL	33Q 40KL
Battery wire	8AWG ($6\ mm^2$)	6AWG ($16mm^2$)	6AWG ($16mm^2$)	4AWG ($25mm^2$)

3. To complete the connection by plugging the connector of the external battery cable into the external battery socket of the UPS. Do not attempt to connect any loads to the UPS now. You should connect the input power wire to the right position first. And then set the breaker of the battery pack in the "ON" position. After that set the input breaker in the "ON" position. The UPS begins to charge the battery packs at the time.

4. Parallel operation

4.1 Brief introduction of the redundancy

N+X is currently the most reliable power supply structure. N represents the minimum UPS number that the total load needs; X represents the redundant UPS number, i.e. the fault UPS number that the system can handle simultaneously. The bigger the X is, the higher reliability of the power system is. For occasions where reliability is highly required, N+X is the optimal mode. As long as the UPS is equipped with parallel cables, up to 8 of them can be connected in parallel to realize output power sharing and power redundancy.

4.2 Parallel installation

1. Users need to opt a standard 25-pin communication cable, which should have 25 cores, corresponding stitches and shield, as the UPS parallel cable. The length of the parallel cable is appropriate to be less than 3 m.
2. Strictly follow the stand-alone wiring requirement to perform the input wiring of each UPS.
3. Connect the output wires of each UPS to an output breaker panel first, and then connect the wiring to the load via the breaker panel.
4. The parallel UPS must be equipped with battery individually.
5. Please refer the figure followed to see the wiring of parallel operation. The capacity of the breaker must be not less than the specification as follow.

Model No.	Capacity of breaker
33Q 10KL	≥32A/250VAC
33Q 20KL	≥50A/250VAC
33Q 30KL	≥60A/250VAC
33Q 40KL	≥80A/250VAC

*The requirement of the output wiring is as follows:

★ When the distance between the UPSs in parallel and the breaker panel is less than 20 meters, the difference between the wires of input & output of the UPSs is required to be less than 20%;

★ When the distance between the UPSs in parallel and the breaker panel is greater than 20 meters, the difference between the wires of input & output of the UPSs is required to be less than 10%.

4.3 Operation and maintenance

1. To perform the general operation, follow the stand-alone operating requirement.
2. Start up: The units transfer to INV mode simultaneously as they start up sequentially in utility power mode.
3. Shutdown: the units shut down sequentially in INV mode. When the last one completes the shutdown action, each unit will shut down the inverter simultaneously and transfer to bypass mode.

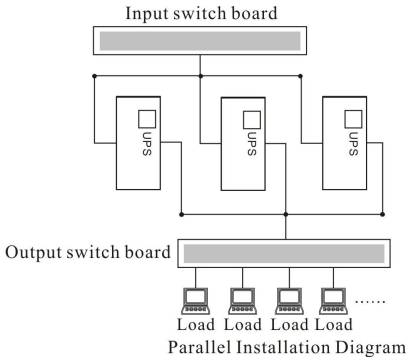

4. To perform the maintenance, follow the stand-alone requirement.

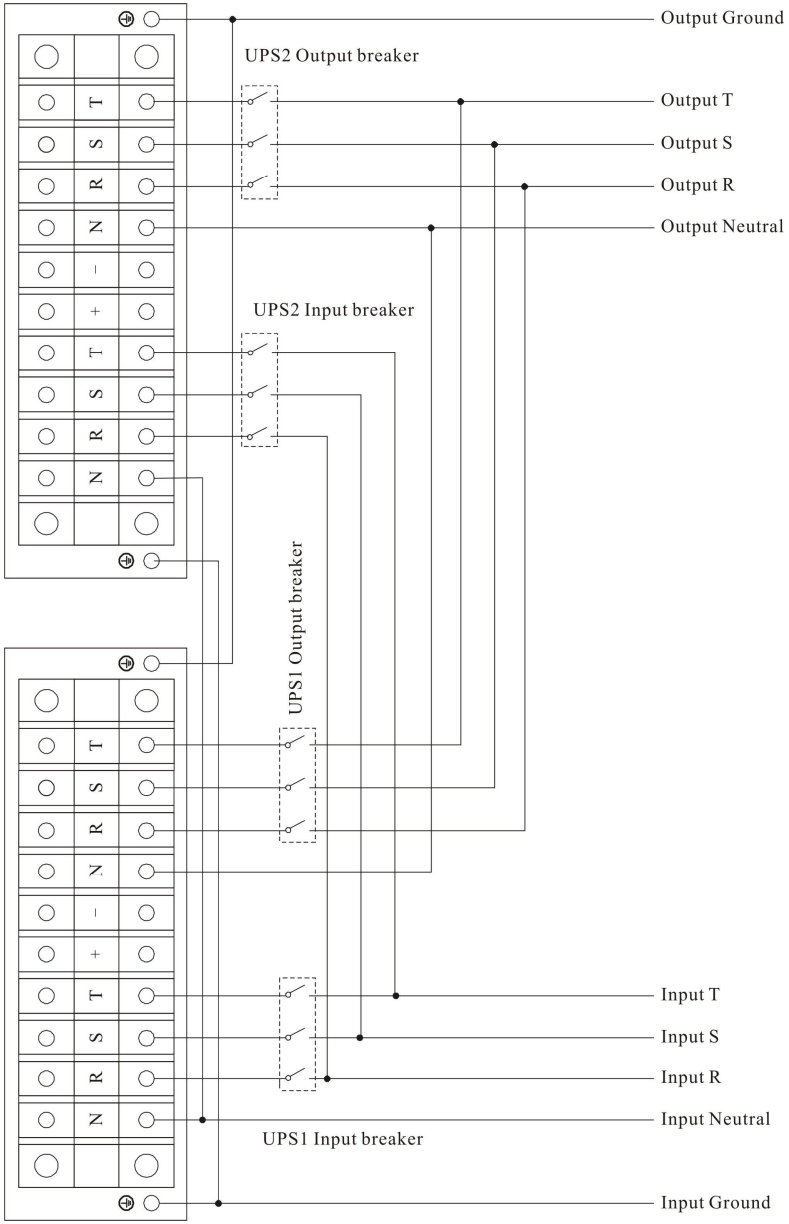

33Q 10KL Parallel Installation Wiring Diagram

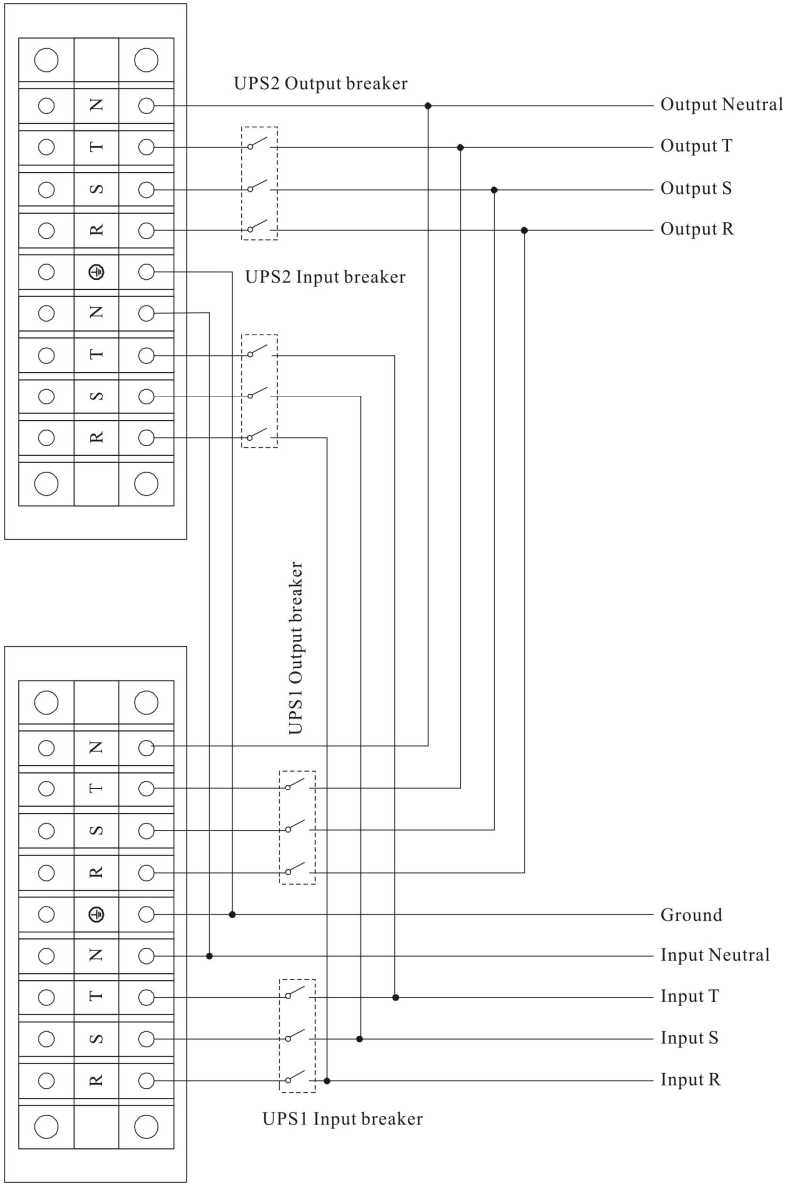

33Q 10K/33 20K(L)/ 33 30KL/33 40KL Parallel Installation Wiring Diagram

5. Operation introduce

5.1 Operation Display Panel

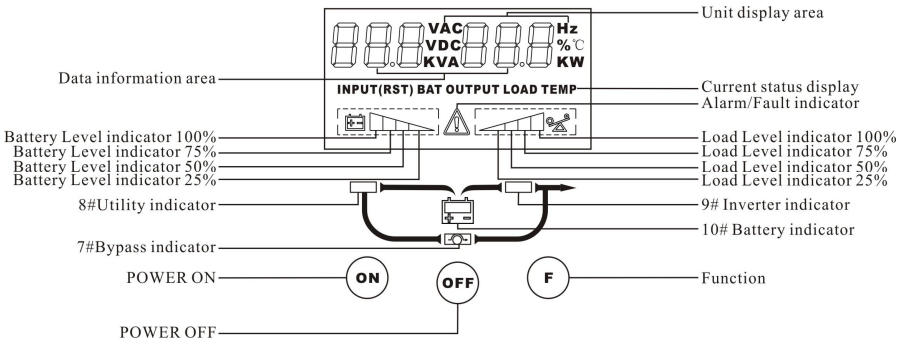

1. ON button:
Pressing the ON button more than 1 second (buzzer beeps once), the UPS system is turned on.

2. OFF button:
By pressing this button more than 1 second (buzzer beeps once) turns off the UPS system whenever the UPS run under the normal mode/battery mode.

3. Function button
The Function button provides the following functions:
★ Battery self- diagnosis: When the UPS ran in normal mode, pressing this button more than 5 seconds (buzzer beeps twice) can start the battery self-diagnosis.
★ Silence function in battery/bypass mode
In battery/bypass mode, when the buzzer beeps, pressing and holding the function button for more than 5 seconds (buzzer beeps two times) can silence the buzzer. Press the button for more than 5 seconds (buzzer beeps twice) again to resume the alarm function.
★ LCD display screen switch
Pressing the function button for more than 1 seconds (buzzer beeps once) to switch LCD display screen.

4. LED indicators
The LED indicators contains Fault indicator, Bypass indicator, utility power indicator, Inverter indicator, Battery indicator. The definition of each indicator is the same as LED panel (refer to table Appendix 1).

5.2 Operation Mode

1. UPS operation mode contains normal mode, battery mode and bypass mode, self test mode and fault mode.
2. Under the four modes, the page showing output voltage and output frequency is the main display page. Under the fault mode, the page showing fault code is the main display page.
3. If users need more information about UPS, Pressing the function button can initiate display screen switch. If the current page is not the main page, UPS will auto switch back the main page after 30 seconds.
4. In order to extend the LCD usage life, the backlight will turn off after 1 minute without any switch operation. At this point, Users just need to touch any button briefly, the backlight will be turn on.

5.2.1 Normal mode

When operating in the normal mode, the display of main page on the front panel is shown as the figure 5-2. The utility power indicator and the Inverter indicator are turn on. Load information area shows load value, and the battery level area indicates dynamically when the battery is not full charged (the battery level icons lit one after another circularly). When the battery is full charged, all the level icons are turn on.

1. If the utility power indicator blinks, it indicates that there are problems with reversed polarity (L, N) of site wiring or disconnect with ground. UPS is still working in normal mode. If the battery indicator is turn on at the same time, it shows that the voltage or frequency of the utility power is out of the normal input range of the UPS. The UPS works in battery mode.

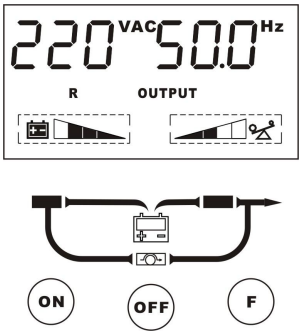

Figure 5-2 Normal Mode

2. If load is more than 105 percent, the buzzer beeps twice every second, meanwhile, the warning icon blinks every second too, reminding that you

have been overloaded. You should get rid of some unnecessary loads one by one to decrease the loads until the alarm clear.

3. If the battery indicator blinks, it indicates that no battery is connected to the UPS or battery voltage is too low. You should check if battery is properly connected to the UPS, and press function button more than 5 seconds to start the battery self-diagnosis. If the connection between battery and UPS is confirmed without any problem, it may be due to the defect or aging of the battery, please refer to the "troubleshooting" in chapter 8 to solve the problem accordingly.
4. The other four display pages are load percent page, actual load page, input information page and the maximum temperature page.

Note:

Connection to the power generator should be made according to the following steps:

★ Activate the power generator and wait until the operation is stable before connecting the output of the power generator to the UPS (be sure that the UPS is in idle mode). Then, turn on the UPS according to the startup procedure. After the UPS is turned on, the loads are connected one by one.

★ It recommended that the capacity of the AC generator chosen should double that of the UPS.

5.2.2 Battery Mode

When operating in the normal mode, the display of main page on the front panel is shown as the figure 5-3. The battery indicator and the Inverter indicator are turn on. If the utility power indicator blinks at the same time, it shows that the utility power is abnormal. Load information area shows load value, and bat level area shows current battery capacity.

1. When the UPS is running in battery mode, the alarm will beep every 4 seconds. If the "Function" key is pressed for more than 5 seconds, the alarm will not beep (silence function). Press the "Function" key more than 5 seconds again to resume the alarm function.

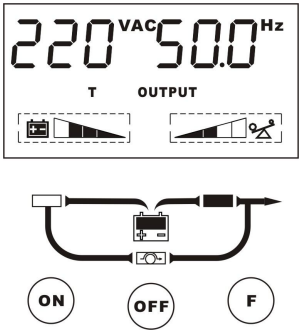

Figure 5-3 Battery Mode

2. When the battery capacity decreases, the number of load/battery capacity indicators turned on will decrease. If the battery voltage drops to the pre-alarm level (capable of maintaining the backup time for more than 2 minutes), the alarm will beep every second to remind the user of insufficient battery capacity.
3. The other four display pages are load percent page, actual load page, battery information page and the maximum temperature page.

5.2.3 Bypass Mode

When operating in bypass mode set up through UPSilon software, the display on the front panel is shown as the figure 5-4, the utility power indicator and the bypass indicator are turn on. The load/battery capacity indicator will be turned on in accordance with the load capacity connected. Load information area shows load value, and the battery level area indicates dynamically when the battery is not full charged (the battery level icons lit one after another circularly). When the battery is full charged, all the level icons are turn on.

1. When operating in bypass mode, the UPS beeps every 2 minutes. If the “Function” key is pressed for more than 5 seconds, the alarm will not beep (silence function). Press the “Function” key more than 5 seconds again to resume the alarm function.
2. If the utility power indicator blinks, it shows that the voltage or frequency of the utility power is out of the input range of the UPS or there are problems with reversed polarity (L/N) of site wiring or disconnect to the ground for protection.
3. The other four display pages are load percent page, actual load page, input information page and the maximum temperature page.

Notes:
When operating in bypass mode, the backup function of the UPS is not available and the power used by the load is directly from the utility power via internal EMI filter.

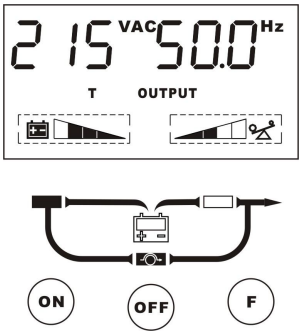

Figure 5-4 Bypass Mode

5.2.4 LCD indication of UPS alarm status and faults

In the event of an UPS fault, UPS enters fault operation mode, at this point, the fault icon turn on consistently, the buzzer beeps continuously and the data information area shows current fault code (refer to Appendix), the display on the front panel is shown as the figure 5-5.

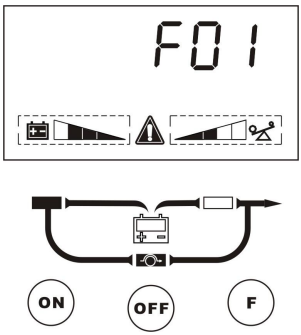

Figure 5-5 Fault display

When a warning occurred, the fault icon blinks every second, and users can switch to the alarm display page shown as the figure 5-6 to check the warning code.

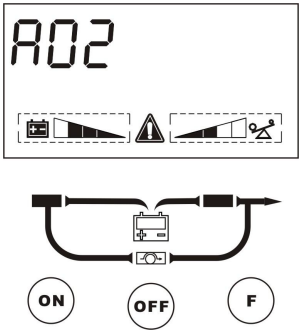

Figure 5-6 Alarm display

5.3 Setting the output voltage and frequency

1. Connect the mains input to the UPS, and make the UPS works in standby mode or bypass mode.
2. Press the 'F' and 'OFF' button more than one second, then release, the buzzer will beep once, the "OUTPUT" is flashing, which means all of bottom are used for UPS setting, at this point, if the "VAC" is flashing, which means the output voltage is set to enable; if the "Hz" is flashing, which means the frequency is set to enable, the LCD screen indicator represents current output voltage and frequency setting value.
3. If you need to set the voltage, check the voltage setting is enabled ("VAC" is flashing). If not, press the 'F' more than one second, then release,the output setting is enabled, at this point you can start to set output voltage.
4. Release the 'OFF' key after you press it more than one second, LCD display the selected output voltage in turn.
5. Repeat the fourth step until the LCD indicator meets the required voltage.
6. Press 'ON' key about one second, the output voltage setting completed.
7. The frequency setting is the same as the voltage setting, but before the setting, please confirm the frequency setting is enabled, if not, press 'F' key about one second in order to switch to the frequency setting screen ("Hz" is flashing).
8. When done, Press the 'F' and 'OFF' button more than one second, then release, the buzzer will beep once, exit the setting mode.

In the setting process, if no key is detected within twenty second, the UPS exits the setting screen automatically.

6. Communication

This series is equipped with an intelligent slot for Web power (optional accessory) or other optional card to achieve remote management of the UPS. Please contact your local distributor for further information. Provide computer RS232 serial communication interface, to monitor the input power supply and UPS information, and control the state of UPS.

6.1 RS232 communication

The standard RS232 port is applicable to communicate with computer.
Description and pin assignment of RS232
Baud rate: 2400bps
Data bit: 8 bit
Ending bit: 1bit
Parity bit: None
DB-9 pin assignment:

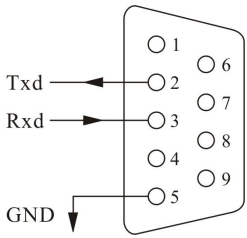

RS232 Interface

Pin number	Function description	I/O
3	Rxd	Input
2	Txd	Output
5	GND	Ground

6.2 AS400 card communication

User enables to monitor and manage the UPS through installed the AS400 card (optional).
PIN1: UPS failure (normally open, active close)
PIN2: Summary alarm
PIN3: Ground
PIN4: Remote shutdown
PIN5: Common
PIN6: Bypass active (relay close)
PIN7: Low battery
PIN8: UPS on (relay close)
PIN9: Utility Power failure (normally open, active close)

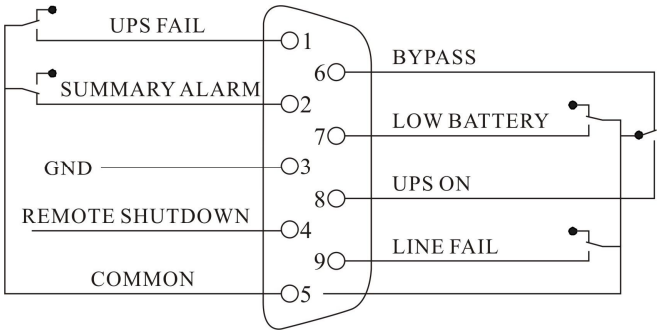

AS400 Interface

7. Battery

7.1 Battery maintenance

1. This series UPS only requires minimal maintenance. The battery used for standard models is valve regulated sealed lead-acid maintenance free battery. These models require minimal repairs. The only requirement is to charge the UPS regularly in order to maximize the expected life of the battery. When being connected to the utility power, whether the UPS is turned on or not, the UPS keeps charging the batteries and also offers the protective function of overcharging and over discharging.
2. The UPS should be charged once every 4 to 6 months if it has not been used for a long time. In the regions of hot climates, the battery should be charged and discharged every 2 months. The standard charging time should be at least 12 hours.
3. Under normal conditions, the battery life lasts 3 to 5 years. In case if the battery is found not in good condition, earlier replacement should be made. Battery replace event should be performed by qualified personnel.
4. Replace batteries with the same number and same type of batteries.
5. Keep the ambient temperature between 15℃ and 25℃.
6. Do not replace the battery individually. All the batteries should be replaced at the same time following the instructions of the battery supplier.
7. Normally, the batteries should be charged and discharged once every 4 to 6 months. Charging should begin after the UPS shuts down automatically in the course of discharging, the standard charging time for the standard UPS should be at least 12 hours. Discharge the battery with the load more than 50%.

7.2 Notes for battery disposal and replacement

1. Before disposing batteries, remove conductive articles such as necklace, wrist watches and rings.
2. If it is necessary to replace any connection cables, please purchase the original materials from the authorized distributors or service centers, so as to avoid overheat or spark resulting in fire due to insufficient capacity.
3. Do not dispose of batteries or battery packs in a fire, they may explode.
4. Do not open or mutilate batteries, released electrolyte is highly poisonous and harmful to the skin and eyes.
5. Do not short the positive and negative electrodes of the battery, otherwise, it may result in electric shock or fire.

6. Make sure that there is no voltage before touching the batteries. The battery circuit is not isolated from the input potential circuit. There may be hazardous voltage between the battery terminals and the ground.
7. Even though the input breaker is disconnected, the components inside the UPS are still connected with the batteries, and there are potential hazardous voltages. Therefore, before any maintenance and repairs work is carried out, switch off the breaker of the battery pack or disconnect the jumper wire of connecting between the batteries.
8. Batteries contain hazardous voltage and current. Battery maintenance such as the battery replacement must be carried out by qualified personnel who are knowledgeable about batteries. No other persons should handle the batteries.

8. Appendix

In the event of an UPS fault, shoot the trouble according to Table. If the fault still persists, please contact our customer service center.

8.1 Fault code

Faults			Possible cause	Solution
Fault/ Warning code	**Fault icon**	**Alarm**		
F01	On constantly	Beep continuously	Bus soft start fails	Please contact the distributor or Service center.
F02	On constantly	Beep continuously	BUS over voltage fault	Please contact the distributor or Service center.
F03	On constantly	Beep continuously	BUS low voltage fault	Please contact the distributor or Service center.
F04	On constantly	Beep continuously	Bus unbalance	Please contact the distributor or Service center.
F05	On constantly	Beep continuously	BUS short	Please contact the distributor or Service center.
F06	On constantly	Beep continuously	INV soft start fails	Please contact the distributor or Service center.
F07	On constantly	Beep continuously	INV over voltage fault	Please contact the distributor or Service center.
F08	On constantly	Beep continuously	INV low voltage fault	Please contact the distributor or Service center.
F09	On constantly	Beep continuously	R/S INV short	Turn off the UPS. Remove all loads. Ensure that the loads are not failed or the UPS has no internal short before turn on it again. If failed, please contact the distributor or service center.
F10	On constantly	Beep continuously	R INV short	
F11	On constantly	Beep continuously	EPO fault	Check the EPO switch be take off or connect tighten.
F12	On constantly	Beep continuously	T INV short	Turn off the UPS. Remove all loads. Ensure that the loads are not failed or the UPS has no internal short before turn on it again. If failed, please contact the distributor or service center.
F13	On constantly	Beep continuously	S INV short	
F14	On constantly	Beep continuously	S/T INV short	
F15	On constantly	Beep continuously	R/T INV short	

Faults			Possible cause	Solution
Fault/ Warning code	Fault icon	Alarm		
F16	On constantly	Beep continuously	INV negpower	Please contact the distributor or Service center.
F17	On constantly	Beep continuously	R inv negpower	Please contact the distributor or Service center.
F18	On constantly	Beep continuously	S inv negpower	Please contact the distributor or Service center.
F19	On constantly	Beep continuously	T inv negpower	Please check parallel line connect or not.
F21	On constantly	Beep continuously	Inv React Power	Please contact the distributor or Service center.
F22	On constantly	Beep continuously	Overload Fault	Please contact the distributor or Service center.
F23	On constantly	Beep continuously	Inv over temperature	Please contact the distributor or Service center.
F24	On constantly	Beep continuously	Inv relay open	Please contact the distributor or Service center.
F25	On constantly	Beep continuously	Inv relay stick	Please contact the distributor or Service center.
F27	On constantly	Beep continuously	Converter Over Temperature	Maybe the fan out of work or the environment temp. is to high.
F32	On constantly	Beep continuously	Communication line loss	Check the parallel line is connect OK.
F34	On constantly	Beep continuously	Can fault	Please contact the distributor or Service center.
F35	On constantly	Beep continuously	Syn line fault	Please contact the distributor or Service center.
F55	On constantly	Beep continuously	Ntc abnormal	Please contact the distributor or Service center.
F56	On constantly	Beep continuously	Para line loss	Please contact the distributor or Service center.
F57	On constantly	Beep continuously	Bat abnormal	Check the battery number or voltage is right.

8.2 Warring code

Faults			Possible cause	Solution
Fault/ Warning code	Fault icon	Alarm		
A01	Blink once every second	4min beep one sound	Input Line unbalance	Please check R/S/T line voltage and frequency.
A03	Blink once every second	2min beep one sound	Eeprom fault	Please off the UPS and shutdown by itself.
A04	Blink once every second	4min beep one sound	Line fail	Please check line voltage.
A08	Blink once every second	4min beep one sound	Bypass fail	Please check line voltage.
A09	Blink once every second	Beep continuously	INV Bypass Phase sequence is inconsistent	Please off the UPS and then on the UPS in line mode.
A10	Blink once every second	Beep one sound every 30 second	Battery unconnected	Please check battery line connect or not.
A11	Blink once every second	Beep one sound every second	Battery voltage low	The UPS output will be cut off, please switch to the backup power.
A12	Blink once every second	Beep continuously	Battery overcharging	Please contact the distributor or Service center.
A14	Blink once every second	Beep two sounds every second	Overload pre-warning	Reduce the member of loads connected to the UPS.
A15	Blink once every second	Beep continuously	Overload fault	Reduce the member of loads connected to the UPS.
A16	Blink once every second	Beep one sound every second	Fan failure	Ensure that the fan is not locked
A19	Blink once every second	Beep one sound every second	Charger fail	Please contact the distributor or Service center.
A21	Blink once every second	Beep 8 sounds	Start UPS fail	Please check the battery cables connect or not.
A22	Blink once every second	Blink once every second	ID repetition	Please contact the distributor or Service center.

UPS troubleshooting of LCD panel indicator

When you contact the service center, please provide the following information:

★ Model No. and the serial No. of the UPS;

★ The date when the problem arose;

★ Complete description of the problem, including the LED display, alarm warning, power condition and load capacity. If your UPS is a long backup time model, you may also provide the battery information.

8.3 Specifications and performance

Model		33Q 10KL	33Q 10K	33Q 20KL	33Q 20K	33Q 30KL	33Q 40KL
Rated power		10KVA/8KW		20KVA/16KW		30KVA/24KW	40KVA/32KW
Input	Voltage range	(274-478) VAC (Full load)					
	Breaker	32A		50A		60A	80A
	Frequency	40~60Hz (50Hz) /50~70Hz (60Hz)					
	Factor	> 0.99					
Output	Voltage	220V (1±1%)					
	Current	15A		30A		45A	61A
	Factor	0.8					
	Frequency	Line mode: (1) synchronized 46~ 54Hz; (2) 50Hz (line 40~ 46 or 54~ 60Hz); Bat mode: 50Hz.					
	Distortion	THD < 3% (R full load)					
	Overload capacity	105% - 125% transfers to bypass mode after 1 minutes; 125% ± 5%< load ≤ 150% ± 5% transfers to bypass mode after 30second					
	Current crest ratio	3:1					
Efficiency		Line: ≥ 93%, Bat: ≥ 90%					
Rated bat No.		192VDC		240VDC		384VDC	
Charge current		1A/7.5A		1A/6A		5.5A	
ECO/EPO		Optional					
Short protect		YES					
Noise (dB)		≤ 60dB					
Dimension(L*W*H) mm		533*260*501	710*260*717				
Weight (kg)		26	95	57.5	107	59.5	62.5

Note:

Output voltage can be set: 200V/208V/220V/230V/240V.

Frequency can be set as 60Hz.

Operating environment:

Temperature	Humidity	Altitude	Storage temperature
0℃-40℃	<95%	<1000m	0℃-40℃

Note:
If the UPS is installed or used in a place where the altitude is above than 1000m, the output power must be decrease in use, please refer to the table:

Altitude(M)	1000	1500	2000	2500	3000	3500	4000	4500	5000
Load	100%	95%	91%	86%	82%	78%	74%	70%	67%