SPECIFICATION

FOR APPROVAL

ISSUED DATE : **23-Dec-15**

DOCUMENT NO : **OQSS-R123V-7I2-01**

CUSTOMER :

DESCRIPTION : **IR RECEIVER MODULE**

MODEL NO. : **R123V-7I2**

[AUK Corp.]

ISSUE DEPT.			PRODUCTION		Q/A	
ISSUE	REVIEW	APPR'L	REVIEW	APPR'L	REVIEW	APPR'L

[CUSTOMER APPROVAL]

ISSUE	REVIEW					

[REVISION]

NO	DATE	REVISION ITEMS	ISSUED BY	APPR'D BY
0	2015-12-23	ISSUE	BH.LIM	KY.LEE

KODENSHI takes no responsibility for damage caused by improper use of the devices which does not meet the conditions and absolute maximum ratings to be used specified in the relevant specification sheet.

Please obey the instructions mentioned below for actual use of this device.

① This device is designed for general electronic equipment.
Main use of this device are as follows;

* Computer * OA equipment * Telecommunication equipmet(Terminal)
* Measuring instrument * Machine tool *Industrial robot
* AV equipment * Home appliance,etc.

② Please take proper steps in order to maintain reliability and safety, in case this device is used for the uses mentioned below which require high reliability.

* Unit concerning control and safety of a vehicle (air plane,train,automobile etc.)
* Traffic signal * Gas leak detection breaker
* Fire box and burglar alarm box * Other safety equipment,etc.

③ Please don't use for the uses mentioned below which require extremely high reliability.

* Space equipment * Telecommunication equipment(Trunk)
* Nuclear control equipment * Medical equipment(relating to any fatal element),etc.

1. Description

The R123V-7I2 consist of a PIN Photodiode of high speed and a preamplifier IC in the package as an receiver for Infrared remote control systems.

2. Features

- ◆ 2.7 ~ 5.5 Volt supply voltage, low power consumption
- ◆ Shielded against electrical field disturbance
- ◆ High immunity against ambient light
- ◆ Easy interface with the main board
- ◆ TTL and CMOS compatibility
- ◆ One mold package
- ◆ RoHS Compliance

3. Applications

- ◆ TV, VTR, Audio, Air Conditioners, Car Stereo Units, Computers, Interior controlling appliances, and appliances that require remote controlling.

4. Package Outlines

See the attached Drawing No. RM-R12□□-4PIN-ASY-01

5. Absolute Maximum Ratings

[Ta = 25℃]

Parameter	Symbol	Rating	Unit
Supply Voltage / Output Voltage	V_{cc}	6	V
Supply Current / Output Current	I_{out}	2.5	mA
Operating Temperature	$T_{opr.}$	-20℃~80℃	℃
Storage Temperature	$T_{stg.}$	-25℃~85℃	℃
Soldering Temperature	$T_{sol.}$	260(Max 5 sec)	℃
Reflow Soldering Temperature (Pb Free)	$T_{sol.}$	245(Max 10 sec)	℃
Moisture Sensitivity Levels	Level 5a (≤30℃ / 60% RH 24hours)		

6. Reliability Test

Parameter	Rating
High Temperature *1	Ta= + 80℃, Vcc=5V t=240H
High Temperature / High Humidity *1	Ta= + 85℃, 85％RH, Vcc=5V t=240H
Low Temperature *1	Ta= - 30℃, Vcc=5V t=240H
Heat Cycle *1	-25℃(0.5H) ~ + 85℃(0.5H) 20cycle
Dropping *2	Test devices shall be dropped 3 time naturally onto hard wooden board from a 75㎝ height position

Note : *1. Electro-optical Characteristics shall be satisfied after leaving 2hours in the normal temperature

*2. Electro-optical Characteristics shall be satisfied and no deforms and destructions of appearance. (excepting deforms of terminals)

7. Electro-optical Characteristics

[Ta= 25℃, Vcc=5.0V]

Parameter	Symbol	Conditions		Min.	Typ.	Max.	Unit
Supply Voltage Range	V_{cc}			2.7	-	5.5	V
Current Consumption	I_{cc}	No Input Signal	V_{cc}=5V	0.2	0.55	0.8	mA
			V_{cc}=3V		0.5		
Peak Wavelength *3	λ_p			-	940	-	nm
B.P.F Center Frequency	f_o			-	37.9	-	kHz
Transmission Distance *3	L	250Lux	0 °	40	-	-	m
			±30 °	32	-	-	m
High Level Output Voltage *3	V_{OH}	30cm over the ray axis		Vcc-0.5	Vcc-0.3	-	V
Low Level Output Voltage *3	V_{OL}			-	0.2	0.5	V
High Level Output Pulse Width *3	T_{WH}	Burst Wave = 600μs		400	-	800	μs
Low Level Output Pulse Width *3	T_{WL}	Period = 1.2ms		400	-	800	μs
Output Form	Active Low Output						

Note : *3. It specifies the maximum distance between emitter and detector that the output waveform satisfies the standard(8-2,3) under the conditions below against the standard transmitter

1) Measuring place : Indoor without extreme reflection of light

2) Ambient light source : Detecting surface illumination shall be irradiate 200±50Lux under ordinary white fluorescence lamp without high frequency lightning

3) Standard transmitter : Burst wave indicated in drawing(8-1) of standard transmitter shall be arranged to 1.6Vp-p under the measuring circuit specified in drawing(8-2,3)

4) Application Circuit : Recommend to design a circuit without using Rp & Cp2.

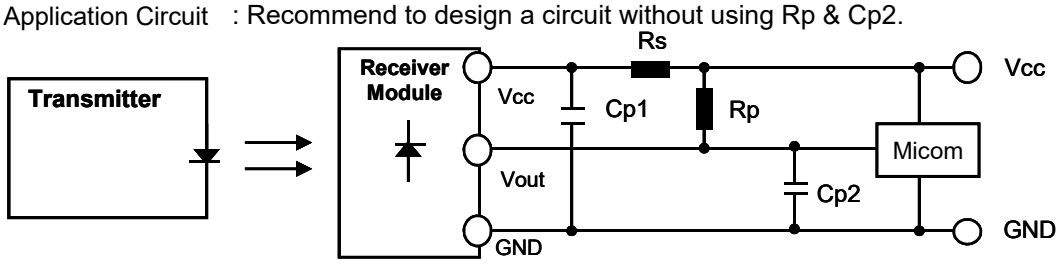

■ Rs (Vcc input series resistor) : 100 Ω ~ 470 Ω

■ Cp1(Vcc-GND terminal series Condenser) : 47 μF ~ 100 μF

■ Rp (Vcc-Vout terminal Pullup resistor) : Optional (when using 10kΩ or more)
When Rp is lower than 10kΩ, Micom can't reply by a VoL rise.

■ Cp2(Vout-GND terminal pararllel Condenser) : Optional (when using 100 pF less than)

8. Measure Method

8-1. Output Pulse Width

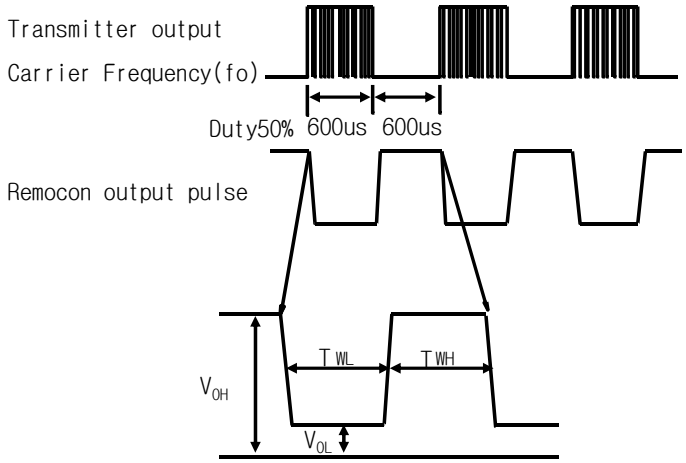

8-2. Standard Transmitter

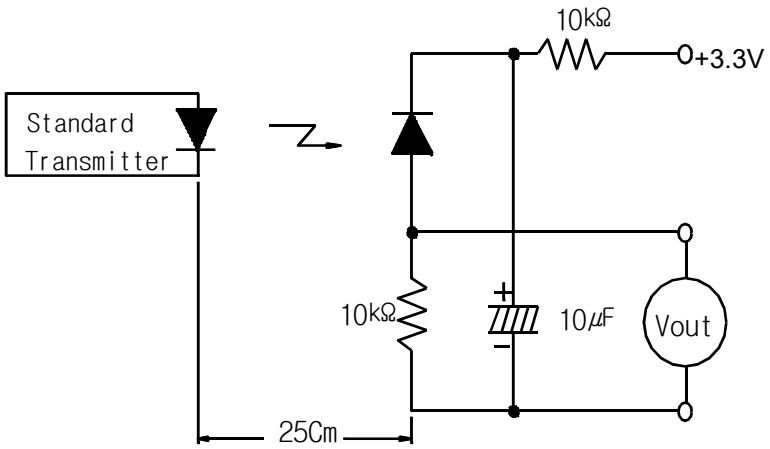

8-3. Test Condition of Transmission Distance

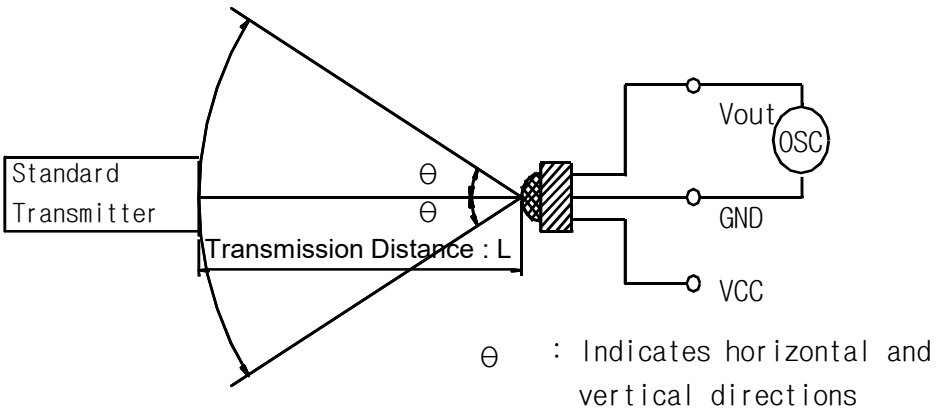

9. Inspection Criteria

In electro-optical characteristics, total quantity shall be inspected as below.

- Front distance between emitter and detector
- Current consumption
- High level output voltage
- Low level output voltage

10. Customer must check below clauses before using

10-1. When this infrared remote control detecting unit shall be adopted for wireless remote control, please keep the following standards.

(1)	tgap = Min. 320usec , tburst = Min. 160usec		
(2)	tburst & t1 = Leader code		
	160~1200usec		more than 1200 ~max 10msec
(3)	tpause	Min. 1msec	Min. 30msec
(4)	Duty(Σtburst /T)	unlimited	Max. 30%
(5)	Data word length	unlimited	Max. 100msec

suitable DATA FORMAT : ● : continuouse key ×: one key					
NEC CODE	●	SONY 12bit	●	Matsushita Code	●
RC5/RC6	●	SONY 15bit	●	Mitsubishi Code	●
Toshiba Micom Code	●	SONY 20bit	●	Zenith Code	●
Sharp Code	●	RCMM	●	JVC Code	●
Continuous Data communication don't support. (tpause = 0ms)					

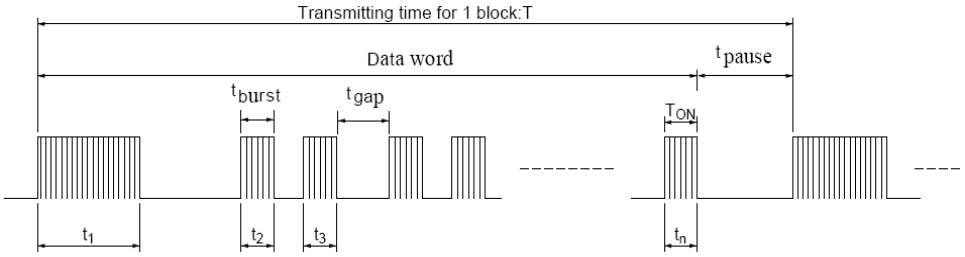

10-2. We recommand minimum 30cm distance between RC-M and transmitter for normal operating.
If the distance between RC-M and Transmitter is too near, it might not respond.

10-3. If your condition doesn't meet the above statement, it might not operate properly.

11. Caution(When use and storage of this device)

11-1. Store and use where there is no force causing transformation or change in quality

11-2. Reflow maximum temperatuer is 250+0/-5℃ within max 10seconds within 24 hours From 30℃/60% humidity.

11-3. From 30℃/60% humidity there is not the reflowing problem within 24 hours, but when the temperature condition is higher or 24 hours lapse after opening, product guideline is encouraged to dry from 60℃+5℃, ≤5% RH during 96 hours which are a temperatre where has not become the damage of reel packing.

11-4. Do not wash this device. Wipe the stains of diode side with a soft cloth.

11-5. The shield case shall be grounded on the PCB pattern. There are two cases, one is that shield case
If the receiver modules of shield case is not becoming ground connection, there is a possibility of being weak in the EMI(Electronic Microwave Interperence) condition.

11-6 Solder pad within the condition of ratings. after soldering do not add extrorse force.

11-7. Put decoupling device between Vcc and GND for reduce the noise from power supply line.
recommand Vcc-GND 47μF and Vcc- 100Ω. Decoupling device should be near receiver modules.

11-8. The decrease in distance, the output noise, the malfunction, etc. might occur because of a surrounding electromagnetic environment.

11-9. To prevent static electricity damage to the Pre-AMP make sure that the human body, the soldering iron is connected to ground before using

11-10. This device has to control of static electricity

AUK Corp. guarantees a R123V-7I2 up to M.M 200V , HBM 2KV

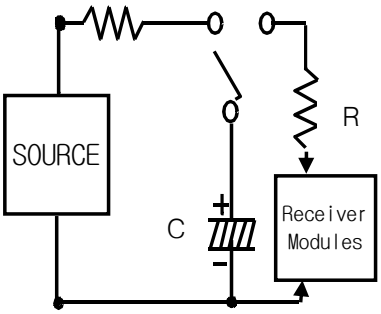

M.M = MACHINE MODEL(Resistance: 0KΩ Capacitor: 200pF)

HBM = HUMAN BODY MODEL(Resistance: 1.5kΩ Capacitor: 100pF)

11-11. This device is not design to endure radiate rays and heavily charged particles.

12. Period of Guarantee and Extent of Guarantee

12-1. Period of Guarantee

1 year after designated place.

12-2. Extent of Guarantee

AUK Corp. Shall supply the replacements against defects that will caused from KODENSHI AUK Corp. fault.

12-3. This product complies with RoHS directive.

Object : mercury, lead, cadmium, hexavalent chromium, polybrominated biphenyls and polybrominated diphenyl others

13. Others

In case where any trouble or questions arise, both parties agree to make full discussion covering the said problem

14. Reflow

14-1. Regarding preheat and main heating, please set the temperature according to the reflow temperature profile as below.

14-2. Even it is within the temperature profile condition as below, the disconnection of wire in the package might be caused by the stress join the package due to the PCB's curving and bending.
Please take care about the condition of reflow machine when use.

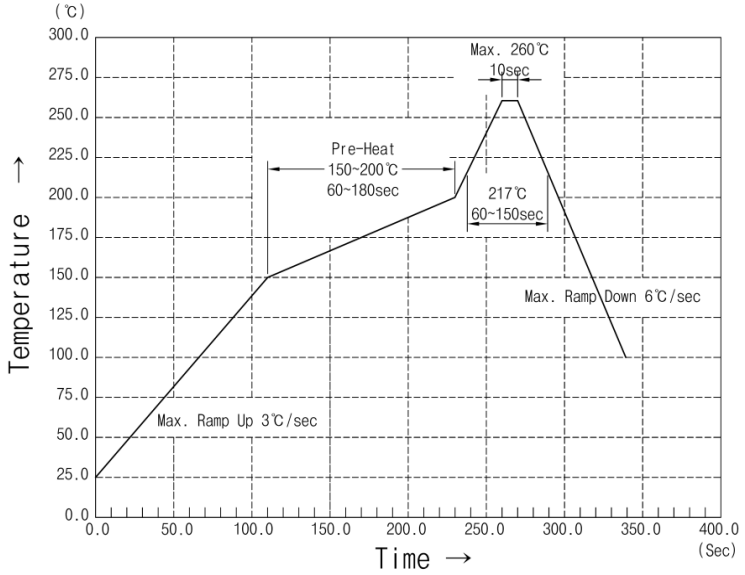

Recommended lead free reflow soldering temperature profile.

14-3. Set the fumace temperatures for per-heating and heating in accorance with the reflow temperature profile as shown in the diagram.
Exercise extreme care to keep the maximum temperature below 245℃.
The temperature shown in the profile means the temperature at the device surface.
Since there is a temperature difference between the component and the circuit board. It should be verified that the temperature of the device is accurately being measured.

14-4. Please do not pile something on the product at reflow soldering because the transformation of the package resin may caused.

14-5. When you do the reflow soldering twice, please process second reflow soldering within 8 hours after finish the first soldering

14-6. Handing after reflow should be done only after the work surface has been cooled off.

15. Manual Soldering

15-1. Use a soldering iron of 25W or less. Adjust the temperature of the soldering iron below 300℃.

15-2. Finish sodering within three seconds.

15-3. Handle products only after the temperature has cooled off.

15-4. To avoid the product is transformed and breakdown, it needs to take care that the power should not join to the product at soldering or immediately after soldering.

16. DIMENSION

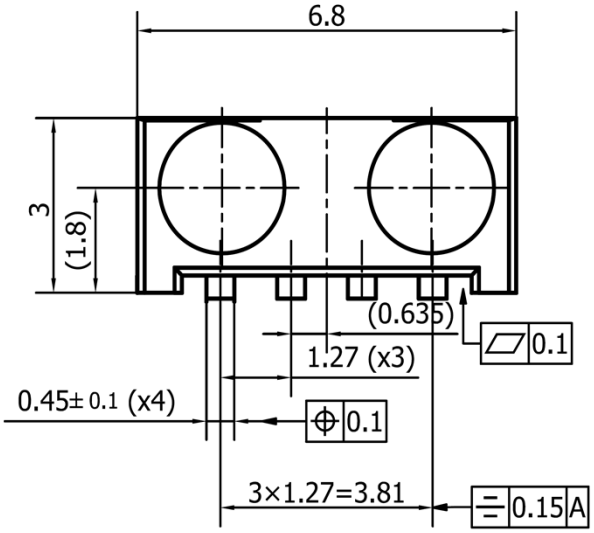

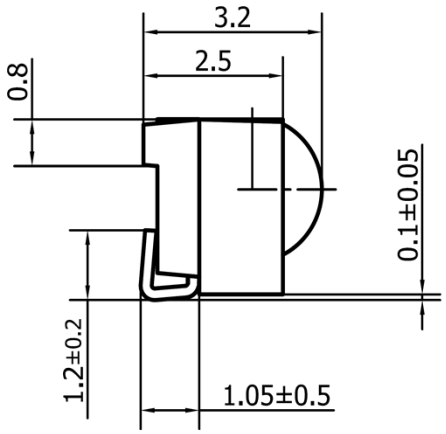

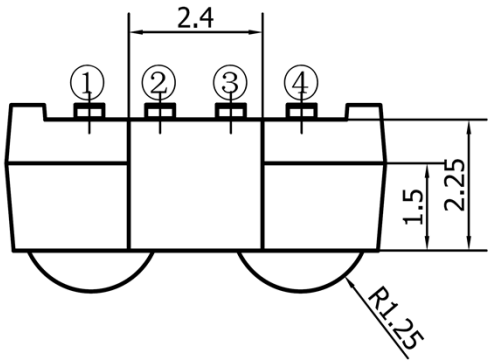

P.C.B. Layout

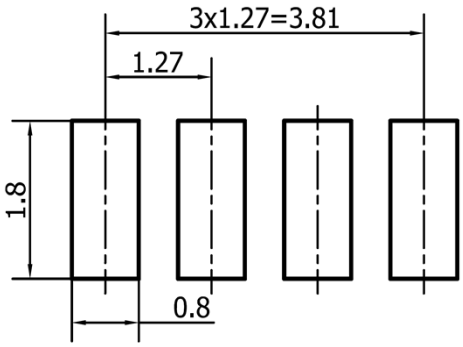

Note

1. Unit mm
2. Unspecified tolerance : ± 0.3mm
3. Reference dimension : ()
4. Electrode base material : Cu
5. Electrode terminal finish : Sn plating
6. Mold resin : optical filter Epoxy
7. Pin configuration
   ① GND
   ② VCC
   ③ OUT
   ④ GND

17. TAPING

17-1. Taping specification · dimensions · product unsertion

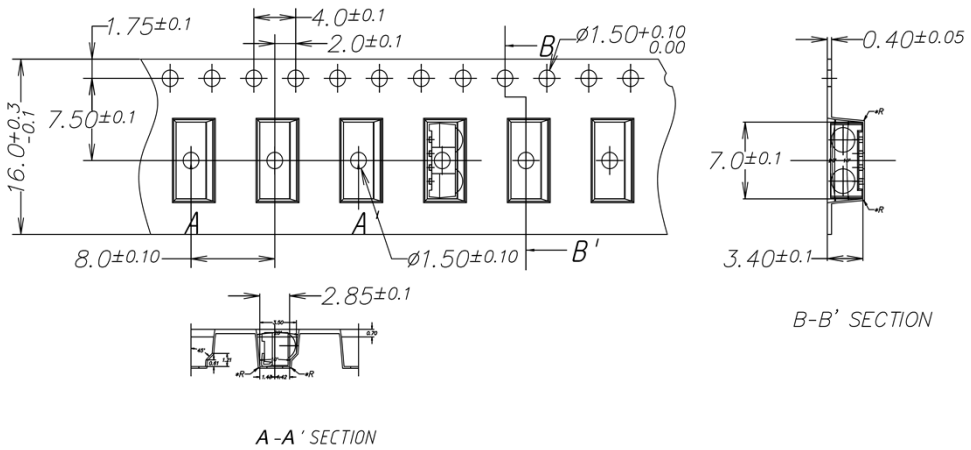

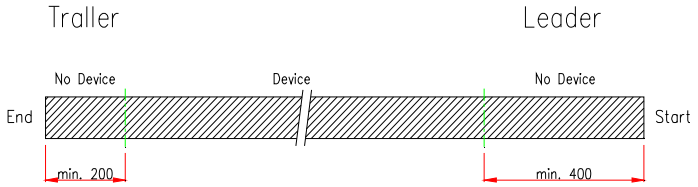

17-2. Reel specification · dimensions

Material : PS Conductivity

The minimum packing quantity : 2,400pcs/reel

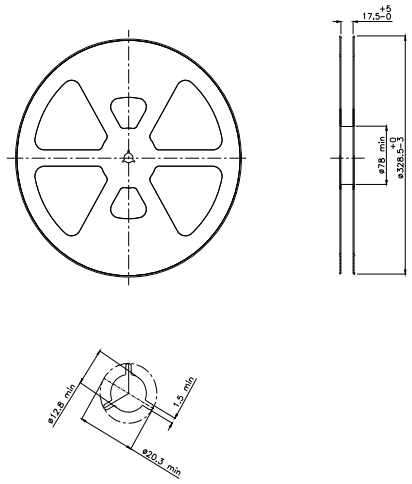

18. PACKING

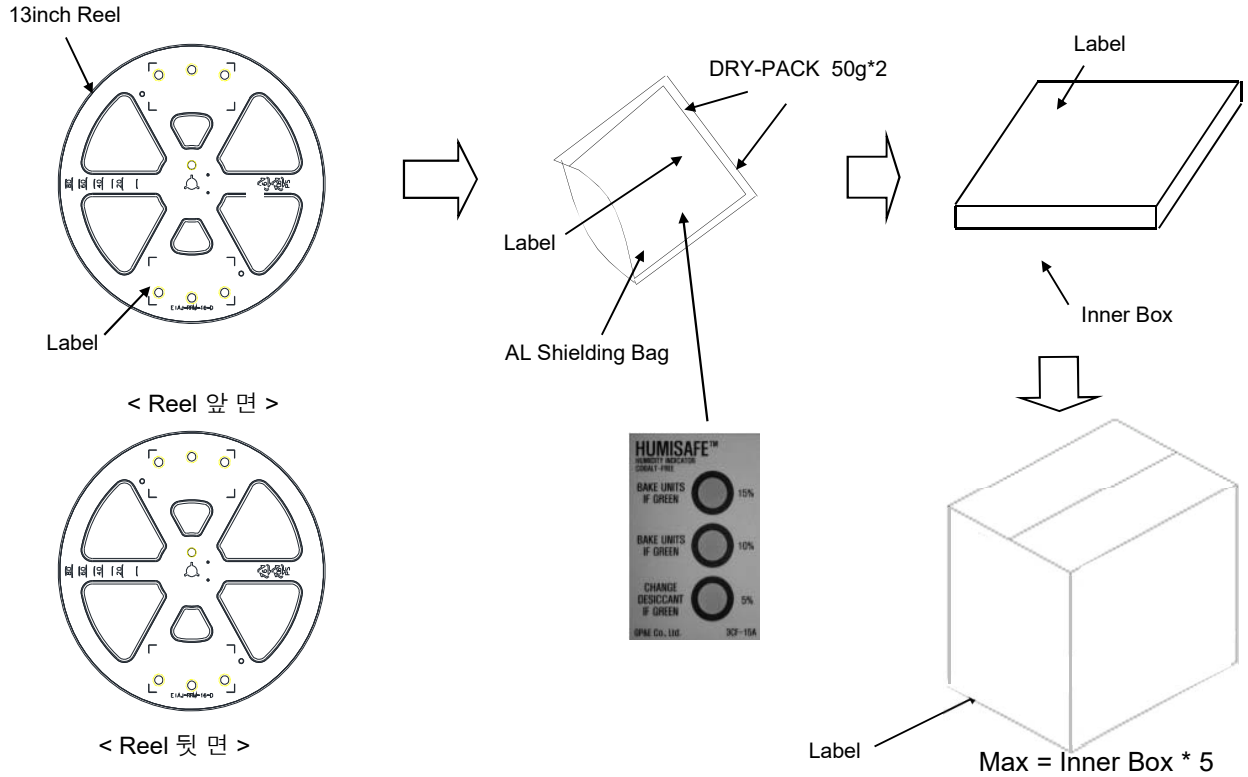

Label

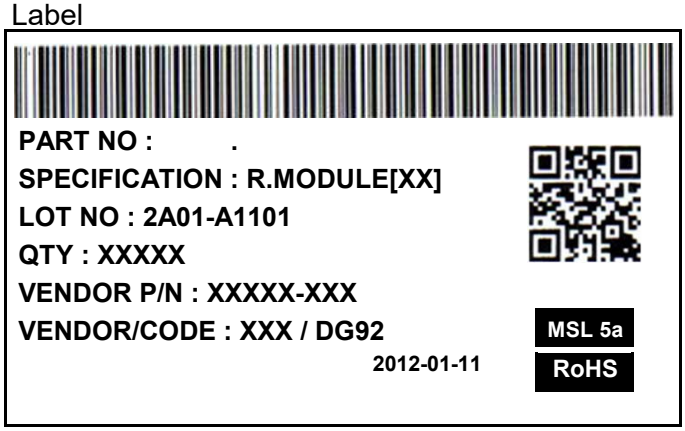

	size (W*L*H ㎜)	count
Tapping	13inch Reel	-
Aluminum bag	400*450*0.15	2,400PCS
Inner Box	430*430*50	4,800PCS
Out Box	450*450*360	24,000PCS