Torin
BIG RED JACKS
50
YEARS
1968 - 2018
APP Store
Android

(CHANGSHU, CHINA) **CHANGSHU TONGRUN AUTO ACCESSORY CO.,LTD**

(NANTONG, CHINA) **NANTONG TONGRUN AUTO ACCESSORY CO.,LTD**

(ANHUI, CHINA) **ANHUI TONGRUN AUTO ACCESSORY CO.,LTD**

(CHANGSHU, CHINA) **CHANGSHU TONGRUN AUTO REPAIR EQUIPMENT CO.,LTD**

(CHANGSHU, CHINA) **CHANGSHU TONGRUN LIFTING EQUIPMENT CO.,LTD**

Founded in 1954 Torin® produces quality automotive products for service professionals. As a manufacturer, a marketer and a developer of automotive maintenance equipment and automotive products Torin® strives to provide our customers with the highest level of customer service and quality products. For many years we have been considered by people throughout the garage industry as being the premier lifting equipment and toolbox manufacturer.

Our brand "BIGRED" "BLACKJACK" "TCE" brings the professional market the same pride, dependability and service, automotive professionals have trusted for the last 50 years."

ISO Certified ISO14001:2004, ISO9001:2000, ISO/TS16949:2009

(Ontario, CA.91761 USA) **TORIN INC**

Torin BIG RED JACKS

Index

Jacks + Hydraulics

Bottle Jack (1-6)
Air Bottle Jack (7)
Screw Jack (8) **1-8**

Trolley Jack (9-12)
Garage Jack (13-18)
Rubber Jack-Pad (19-20)
Professional Garage Jack (21)
Low Profile Garage Jadk (22-23) **9-23**

Aluminum Jack (24-26)
Long Floor Jack (27)
Air Floor Jack (28-31) **24-31**

Portable Power (31-35)
Scissor Jack (36) **31-36**

Industrial Toe Jack (37)
Ratchet Jack (38)
Air Jack (38) **37-38**

Off-Road Jack (39-40)
Wheel Chocks (40) **39-40**

Jack Stand (41-44)
Vehicle Support Stand(45)
High Position Jack Stand (46) **41-46**

Engine Stand (47-48)
Engine Crane (49-51)
Engine Support (53) **47-53**

Shop Press (54-61)
Transmission Jack (62-64) **54-64**

Car Lifts + Tyre Machines

Two Post Lift (65-70)
Four Post Lift (71)
Scissor Lift & Truck Lift (72-76) **65-76**

Tyre Changer (76-80)
Wheel Balancer (81-83)
Wheel Alignment (84) **77-84**

Tire Repair (85-87)
Brake Lathe (88) **85-92**

Auto Equipments + Accessories

Curing Lamp& Car Dolly (93-94)
Pallet Truck (95-96)
Tire Dolly & Changer (97)
Dual Wheel Dolly (98) **93-98**

Drum Transporter & Spring Compressor (99-100)
Crane & Auto Painting Rack (101-102)
Engine Support (103)
Pipe Bender & Log Splitter (101-107) **99-107**

Air Compressor (108)
Air Hose Reel(109)
Dry/Wet Vacuum Cleaner(110)
Parts Washer & Cleaning Tank (111)
Portable Sandblaster &Sandblast Cabinet (112-113) **108-113**

Low-profile Oil Drain & Pastic Oil Drain (114-115)
Grase Injector&Air Tire Inflating Gun (116-117)
Vertical jerrican & Pressure Washer (118) **114-118**

Car Creeper (119-120)
Car Seat (121-122) **119-122**

Cable Puller & Winch (123-124)
Chain Block (125-128) **123-128**

Bike Rack (129)
Bike Work Stand (130)
Dog Guard & Coat Hanger (131-132) **129-132**

Tire Rack&wheel Step(133)
Heavy Duty Air Compressor (134) **133-134**

Car Ramp (135-136) **135-136**

Polisher Tyre Wrench(137-140) **137-140**

Auto Tools + Storage

23 Piece Hydraulic Puller Set &
Slide Hammer Puller Kit (141)
Auto Repair Tools (142-152) **141-152**

Plastic & Steel Box (153-158)
Tool Cabinet With Tools (159-171)
Work Gloves (172-174) **153-174**

Motorcycle Equipment

Motor Lifting Jack (175) **175**

Motor Lifting Table (176-179) **176-179**

Motor Support Stand (180-182) **168-182**

WWW.TONGRUNJACKS.COM

Welded Bottle Jacks

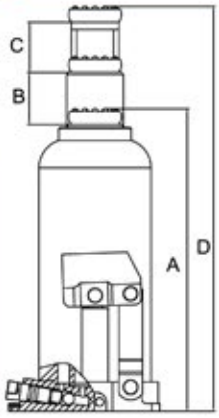

- Steel plate instead of cast iron for environment protection
- Preventing from oil leakage
- Oil remaining clear after using

Complies with ASME Safety Standards

Color Box B

Blow Mold Case C

TH90204 2 Ton

TH90304 3 Ton **TH90404** 4 Ton

TH90504 5 Ton **TH90604** 6 Ton

TH90804 8 Ton **TH91004** 10 Ton

TH91204 12 Ton

TH91504 15 Ton **TH91604** 16 Ton

TH92004 20 Ton

TH93204 32 Ton

TH95004 50 Ton

Model	Capacity	Min.Height (mm)	Lift Height (mm)	Adjustable Height(mm)	N.W. / G.W. (kg)	Package Size (mm)	QTY/CTN (pcs)	QTY/20'CY (pcs)	A	B	C	D	ExF
									(mm)				
TH90204	2Ton	180	112	48	2.35 / 2.46	340x235x210	6	6660	180	112	48	340	96x90
					2.35 / 2.71	520x230x275		5136					
TH90304	3Ton	190	115	60	2.95 / 3.1	360x265x230	6	5232	190	115	60	365	109x97
					2.95 / 3.37	570x230x305		4032					
TH90404	4Ton	190	115	60	2.95 / 3.1	360x265x230	6	5232	190	115	60	365	109x97
					2.95 / 3.37	570x230x305		4032					
TH90504	5Ton	210	125	70	3.9 / 4.1	280x265x245	4	3976	210	125	70	405	118x106
					3.9 / 4.5	400x230x330		3816					
TH90604	6Ton	210	125	70	3.9 / 4.1	280x265x245	4	3976	210	125	70	405	118x106
					3.9 / 4.5	400x230x330		3816					
TH90804	8Ton	225	145	80	5.16 / 5.3	295x275x260	4	3096	225	145	80	450	124x114
TH91004	10Ton	225	145	80	5.16 / 5.3	295x275x260	4	3096	225	145	80	450	124x114
TH91204	12Ton	230	150	80	6.5 / 6.62	415x165x255	3	2520	230	150	80	460	135x118
					6.5 / 7.34	410x195x305		2229					
TH91504	15Ton	230	150	80	7.9 / 8.03	305x175x270	2	2040	230	150	80	460	143x126
TH91604	16Ton	230	150	80	7.9 / 8.03	305x175x270	2	2040	230	150	80	460	143x126
TH92004	20Ton	240	150	60	9.7 / 9.9	315x185x270	2	1640	240	150	60	450	160x140
TH93204	32Ton	260	160	/	17.8 / 18.05	195x185x280	1	930	260	160	/	420	185x165
TH95004	50Ton	280	170	/	25.8 / 26.05	220x205x300	1	645	280	170	/	450	207x185

Hydraulic Bottle Jacks

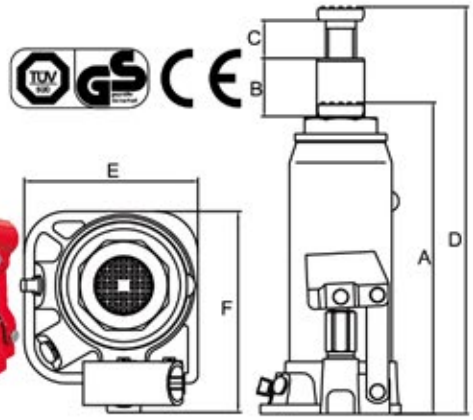

T90204 2 Ton
T90304 3 Ton
T90404 4 Ton
T90504 5 Ton
T90604 6 Ton
T90804 8 Ton
T91004 10 Ton

T91204 12 Ton
T91504 15 Ton
T91604 16 Ton
T92004 20 Ton
T93204 32 Ton
T95004 50 Ton

Color Box B

T90204 (With BMC) 2 Ton

C Blow Mold Case

T90304 (With BMC) 3 Ton
T90404 (With BMC) 4 Ton

T90504 (With BMC) 5 Ton
T90604 (With BMC) 6 Ton

Model	Capacity	Min.Height (mm)	Lift Height (mm)	Adjustable Height(mm)	N.W. / G.W. (kg)	Package Size (mm)	QTY/CTN (pcs)	QTY/20'CY (pcs)	A	B	C	D	ExF
									(mm)				
T90204	2Ton	181	116	48	B 2.63 / 2.7	315x220x216	6	6030	181	116	48	345	88x92
					C 2.63 / 3.04	520x230x290		4620					
T90304	3Ton	194	118	60	B 3.35 / 3.42	330x245x235	6	4782	194	118	60	372	92x100
					C 3.35 / 3.76	570x240x310		3906					
T90404	4Ton	194	118	60	B 3.35 / 3.42	330x245x235	6	4782	194	118	60	372	92x100
					C 3.35 /3.76	570x240x310		3906					
T90504	5Ton	216	127	70	B 4.35 / 4.5	265x235x260	4	3692	216	126	70	413	96x112
					C 4.35 / 4.76	405x235x335		3126					
T90604	6Ton	216	127	70	B 4.35 / 4.5	265x235x260	4	3692	216	127	70	413	96x112
					C 4.35 / 4.76	405x235x335		3126					
T90804	8Ton	230	147	80	B 5.48 / 5.57	275x250x260	4	2944	230	147	80	457	103x118
T91004	10Ton	230	150	80	B 6.46 / 6.55	285x260x265	4	2512	230	150	80	460	110x123
T91204	12Ton	230	155	80	B 7.19 / 7.44	400x168x275	3	2265	230	155	80	465	116x134
T91504	15Ton	230	150	80	B 8.26 / 8.37	320x175x275	2	1958	230	150	80	460	133x136
T91604	16Ton	230	150	80	B 8.26 / 8.37	320x175x275	2	1958	230	150	80	460	133x136
T92004	20Ton	242	150	60	B 10.35 / 10.47	330x180x280	2	1566	242	150	60	452	144x152
T93204	32Ton	285	180	/	B 22.4 / 22.92	240x200x345	1	720	285	180	/	465	152x195
T95004	50Ton	300	180	/	B 32.47 / 32.84	255x210x345	1	503	300	180	/	480	176x225

Hydraulic Bottle Jacks

Low Profile

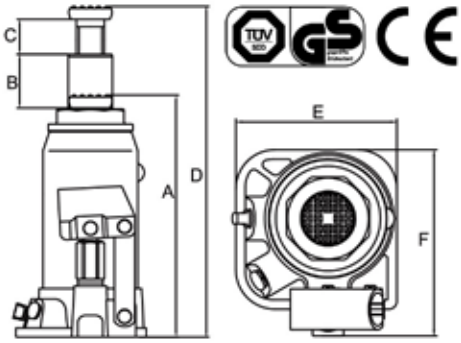

T90204D
2 Ton

T90304D T90404D
3 Ton 4 Ton

T90504D T90604D
5 Ton 6 Ton

T90804D
8 Ton

T91004D
10 Ton

T91204D
12 Ton

T91504D T901604D
15 Ton 16 Ton

T92004D
20 Ton

Color Box B

C Blow Mold Case

T90204D(With BMC)
2 Ton

T90304D(With BMC)
3 Ton

T90504D(With BMC)
5 Ton

Model	Capacity	Min.Height (mm)	Lift Height (mm)	Adjustable Height(mm)	N.W. / G.W. (kg)	Package Size (mm)	QTY/CTN (pcs)	QTY/20'CY (pcs)	A	B	C	D	ExF
									(mm)				
T90204D	2Ton	148	80	48	B 2.3 / 2.23	315x225x170	6	6810	148	80	48	276	88x92
					C 2.3 / 2.74	345x330x185		5880					
T90304D	3Ton	180	110	60	B 3.2 / 3.18	330x240x200	6	5142	180	110	60	350	92x100
					C 3.2 / 3.7	575x245x295		4440					
T90404D	4Ton	180	110	60	B 3.1 / 3.18	330x240x200	6	5142	180	110	60	350	92x100
T90504D	5Ton	185	110	60	B 3.95 / 4.1	260x235x205	4	4084	185	110	60	355	96x112
					C 3.95 / 4.44	485x255x200		3684					
T90604D	6Ton	185	110	60	B 3.95 / 4.1	260x235x205	4	4084	185	110	60	355	96x112
T90804D	8Ton	190	115	60	B 4.8 / 4.92	275x250x220	4	3352	190	115	60	365	103x118
T91004D	10Ton	195	120	60	B 5.61 / 5.72	280x260x225	4	2884	195	120	60	375	110x123
T91204D	12Ton	200	120	60	B 6.54 / 6.68	400x168x220	3	2490	200	120	60	380	116x134
T91504D	15Ton	205	125	60	B 7.6 / 7.7	320x170x225	2	2136	205	125	60	390	133x136
T91604D	16Ton	205	125	60	B 7.6 / 7.7	320x170x225	2	2136	205	125	60	390	133x136
T92004D	20Ton	217	130	60	B 9.73 / 9.92	330x180x240	2	1674	217	130	60	407	144x152

Professional Welding Bottle Jack

Chrome plated

Chrome plated

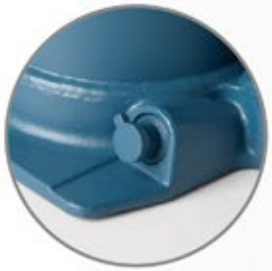

Inside safety valve

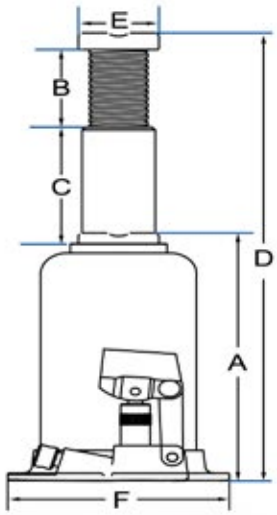

Feature:

- Zinc plated long handle allows ease of pumping.
- Welded construction NO LEAK.
- Safety valve prevents the ram from being overextended and causing damage to the cylinder.
- Inner safety valve prevent the user to adjust the system.
- Arc surface bottom of the steel base to make the load in the center of the piston.
- Prevent rust with ENP (electroless nickel plating) ram piston, make it smooth, bright, and long life.
- Double seals in the pump to prevent the oil leak.
- Light weight forged base provides more steel only where strength is required.
- This design creates a better, stronger design with the tank welded directly to the forged base.
- Longer life than normal screw connection jack due to smooth bearing surfaces and close tolerances.
- Carrying handles on big capacity jack for easy transport.

Complies with ASME Safety Standards

Model	Capacity	A (mm)	B (mm)	C (mm)	D (mm)	E (mm)	F (mm)	N.W. / G.W. (kg)	Package Size (mm)	QTY/CTN (PCS)	QTY/20'CY (PCS)
TH902001	2 Ton	172	88	112	372	28	103x105	3.79 / 3.95	375x290x225	6	4248
TH903501	3.5 Ton	172	88	112	372	28	103x105	3.79 / 3.95	375x290x225	6	4248
TH905001	5 Ton	218	110	146	474	32	110x112	4.89 / 5.05	405x300x260	6	3324
TH908001	8 Ton	220	115	153	488	48	124x127.5	7.37 / 7.56	755x185x270	5	2220
TH910001	10 Ton	220	115	153	488	48	124x127.5	7.37 / 7.56	755x185x270	5	2220
TH912001	12 Ton	236	110	160	506	48	130x136	8.52 / 8.77	755x185x270	5	1915
TH915001	15 Ton	228	113	160	508	56	140x142	9.87 / 10.12	790x190x575	5	1660
TH920001	20 Ton	241	110	165	525	60	165x161	13.07 / 13.32	710x205x290	4	1260
TH925001	25 Ton	240	110	157	510	65	186x174	15.07 / 15.39	590x220x305	3	1089
TH930001	30 Ton	244	110	160	510	65	186x174	15.77 / 16.11	585x215x285	3	1041

Double Ram Bottle Jack

Complies with ASME Safety Standards

Feature:
- Welded construction NO LEAK.
- Inner safety valve prevents the user to adjust the system.
- Prevent rust with ENP (electroless nickel plating) ram piston, make it smooth, bright, and long life.
- Double seals in the pump help to prevent oil leaks.
- Longer life than normal screw connection jack due to smooth bearing surfaces and close tolerances.

Patent No.: ZL200830350236.3

TH810002
10 Ton

TH810003
10 Ton

Model	Capacity	Min. Height (mm)	Max. Height (mm)	Base Place	Product Size (mm)	Package Size (mm)	N.W. / G.W. (kg)	QTY/CTN (PCS)	QTY/20'CY (PCS)
TH810002	10 Ton	125	225	/	180x180x140	560x390x180	7.7 / 8	6	2100
TH810003	10 Ton	182	375	Ø123	158x126x182	550x380x160	8.8 / 9.1	3	1887

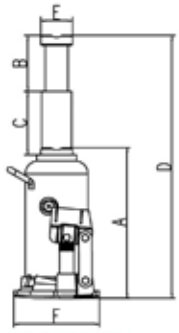

TH804001
TH805001

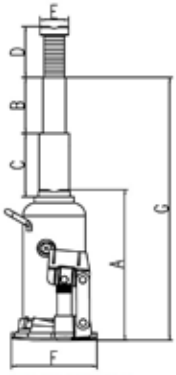

TH810001
TH812001

Chrome Plated

Complies with ASME Safety Standards

TH804001
4 Ton

TH805001
5 Ton

TH810001
10 Ton

TH812001
12 Ton

Model	Capacity	A (mm)	B (mm)	C (mm)	D (mm)	E (mm)	F (mm)	G (mm)	Product Size (mm)	Package Size (mm)	N.W. / G.W. (kg)	QTY/CTN (PCS)	QTY/20'CY (PCS)
TH804001	4 Ton	270	180	170	612	35	124x127.5	/	128x124x265	435x300x320	7.1 / 7.5	6	2238
TH805001	5 Ton	222	146	138	500	41	130x136	/	136x130x230	450x320x275	7.5 / 7.8	6	2148
TH810001	10 Ton	210	120	118	78	48	165x161	442	165x161x208	760x210x265	10.7 / 11	4	1524
TH812001	12 Ton	236	138	128	98	56	186x174.5	498	186x175x230	570x220x290	14.9 / 15.2	3	1104

Double Ram Bottle Jacks

- Dual-stage, steel hardened rams allow for longer travel. Lower retracted heights and higher extended heights. Heat treated saddle provides generous lifting area and secure grip.
- A wide, rugged base provides stability and strength. Safety bypass valves prevent overloading.

Complies with ASME Safety Standards

Model	Capacity	Min. Height (mm)	Lifting. Height (mm)	Adjustable Height (mm)	N.W. / G.W. (kg)	Package Size (mm)	QTY/CTN (PCS)	QTY/20'CY (PCS)
TF0202	2 Ton	150	160	60	4.98 / 5.1	440x315x185	6	3250
TF0402	4 Ton	160	170	60	6.4 / 6.6	328x330x200	4	2432
TF0602	6 Ton	215	270	/	9.06 / 9.3	330x330x245	4	1788
TF0802	8 Ton	270	285	80	10.62 10.72	330x185x305	2	1540

Welded Bottle Jacks

NEW PRODUCT

Double Ram

Model	Capacity	Min. Height (mm)	Lifting. Height (mm)	Adjustable Height (mm)	Product Size (mm)	N.W. / G.W. (kg)	Package Size (mm)	QTY/CTN (PCS)	QTY/20'CY (PCS)
TH80202	2 Ton	170	210	/	97X110.5X170	2.38/2.49	350x275x208	6	6588
TH80402	4 Ton	170	190	60	108X119X170	3.82/3.93	295x265x205	4	4148
TH80602	6 Ton	170	200	60	118X134X170	5.4 / 5.68	320x290x207	4	2896
TH80802	8 Ton	170	200	60	118X134X170	5.4 / 5.68	320x290x207	4	2896
TH81002	10 Ton	180	210	60	136X156X180	8.45/8.58	325x185x215	2	1908

Pneumatic Hydraulic Bottle Jacks

TRQ05002
5 Ton

TQ12002
12 Ton

TQ20002
20 Ton

TRQ30002
30 Ton

TRQ35002
35 Ton

TRQ50002
50 Ton

T910002
100 Ton

CE

Model	Capacity	Min. Height (mm)	Lifting. Height (mm)	Adjustable Height (mm)	Max. Height (mm)	N.W. / G.W. (kg)	Package Size (mm)	QTY/20'CY (PCS)
TRQ05002	5 Ton	210	140	80	430	6 / 7	170x200x230	2300
TQ12002	12 Ton	263	170	82	515	12 / 13	280x170x295	1292
TQ20002	20 Ton	267	165	82	515	16 / 17	300x190x285	988
TRQ30002	30 Ton	250	150	/	405	21 / 22	290x220x270	690
TRQ35002	35 Ton	250	150	/	405	21 / 22	290x220x270	690
TRQ50002	50 Ton	290	160	/	450	34 / 36	460x280x310	455
T910002	100 Ton	335	175	/	510	77 / 83	370x520x400	202

Professional Support Jack

SJ05
5 Ton

SJ10
10 Ton

SJ15
15 Ton

SJ20
20 Ton

SJ25
25 Ton

Model	SJ05	SJ10	SJ15	SJ20	SJ25
Capacity	5 Ton	10 Ton	15 Ton	20 Ton	25 Ton
Min. Height (mm)	240	295	358	405	425
Lifting. Height (mm)	100	160	190	230	246
Max. Height (mm)	340	450	556	632	675
N.W. / G.W. (kg)	4.2 / 4.6	7.1 / 7.7	10.5 / 11.2	15.6 / 17	18.3 / 19
Package Size (mm)	605x315x305	520x350x361	390x380x420	430x230x470	227x227x480
QTY/CTN (PCS)	8	6	4	2	1
QTY/20'CY (PCS)	3648	2178	1500	988	884

Mechanical Screw Jack

TRB1003B
3.2 Ton

TRB1005B
5 Ton

TRB1008B
8 Ton

TRB1010B
10 Ton

TRB1016B
16 Ton

TRB1020B
20 Ton

TRB1025B
25 Ton

TRB1032B
32 Ton

A Mechanical Screw Jack has a compact structure, small volume, is light weight and easy to carry. Screw Jacks are widely used in factories, warehouses, bridges, shipyards, fabrications and construction industries.

Model	TRB1003B	TRB1005B	TRB1008B	TRB1010B	TRB1016B	TRB1020B	TRB1025B	TRB1032B
Capacity	3.2Ton	5Ton	8Ton	10Ton	16Ton	20Ton	25Ton	32Ton
Min.Height(mm)	220	250	260	280	320	325	275	395
Max.Height(mm)	330	380	400	430	500	505	405	595
N.W./G.W.(Kg)	17.2/18	20.4/21	24.8/25.5	21.6/22.5	32.1/33	32.7/33.5	28.5/29.5	34.6/35.5
Package Size(mm)	535x255x160	550x287x180	550x287x180	510x310x190	555x355x210	555x355x210	555x355x210	445x420x235
QTY/CTN(PCS)	4	4	4	3	3	3	3	2
QTY/20'CY(PCS)	3732	3200	2632	2238	1527	1503	1707	946

Hydraulic Trolley Jack

2 TON

B C TA820011

2 TON

B C TA82007

1.5 TON

TA82008

B C

2 TON

Complies with ASME Safety Standards

B C

Complies with ASME Safety Standards

2 TON

TA820014

C Heavy Duty Blow Case

Full Color Box B

B C CE

2 TON

TA820012

Model	Capacity	Min. Height (mm)	Max. Height (mm)	N.W. / G.W. (kg)		Product Size (mm)	Package Size (mm)	QTY/20'CY (PCS)
				Color Box	Blow Case			
TA820011	2 Ton	140	285	5.6 / 6.2	5.6 / 6.5	390x195x140	400x205x145 / 415x220x150	2600 / 2200
TA82007	2 Ton	125	300	6.2 / 6.9	6.2 / 7.2	425x190x125	430x200x135 / 445x225x145	2500 / 2050
TA82008	1.5 / 2 Ton	130	300	6.8 / 7.5	6.8 / 7.8	425x190x130	430x200x135 / 445x225x145	2500 / 2050
TA820014	2 Ton	135	330	7.3 / 7.9	7.3 / 8.4	465x195x135	470x205x145 / 480x225x150	2050 / 1700
TA820012	2 Ton	135	330	8.5 / 9	8.5 / 9.5	450x195x135	465x205x150 / 480x225x150	2050 / 1700

Hydraulic Trolley Jack

2 TON

T820033
T820033X

2 TON

T820033RT

2 TON

T82000D
T82004

PATENET

Exchange with higher saddle

+15 mm

Change

Patent No.:
ZL201530308395.7

2 TON

T82000H

2 TON

T820033R

Extra longer handle

Model	Capacity	Min. Height (mm)	Max. Height (mm)	N.W. / G.W. (kg)		Product Size (mm)	Package Size (mm)	QTY/20'CY (PCS)
				Color Box	Blow Case			
T820033X	2 Ton	135	330	8.6 / 9.4	8.6 / 9.8	442x206x135	460x220x150 / 495x235x160	1950 / 1500
T820033	2 Ton	140	340	8.7 / 9.3	8.7 / 10	450x206x140	460x220x150 / 495x235x160	1770 / 1500
T820033RT	2 Ton	140	340	9.7 / 10.1	9.7 / 11.2	450x206x155	460x220x155 / 490x230x170	1660 / 1500
T82000D	2 Ton	130	340	9.4 / 9.7	9.4 / 11	469x206x130	475x225x160 / 500x235x160	1670 / 1390
T82004	2 Ton	130	350	9.8 / 10.6	9.8 / 11.3	492x218x132	500x230x140 / 525x252x150	1584 / 1416
T820033R	2 Ton	140	340	9 / 9.4	9 / 10.4	450x206x155	465x220x160 / 490x230x170	1780 / 1390
T82000H	2 Ton	135 / 150	342 / 357	9.3 / 10.34	/	470x196x135	490x240x145	1600

Hydraulic Trolley Jack

2 TON

Complies with ASME Safety Standards

2.5 TON

B C

2 TON

TA82001

B C

T825010
T825010R (With rotating handle)

2 TON

B C

CE

TA820037

B

2 TON

CE

T82007

2 TON

T82003

B C

2.25 TON

Complies with ASME Safety Standards

T82253

Model	Capacity	Min. Height (mm)	Max. Height (mm)	N.W. / G.W. (kg)		Product Size (mm)	Package Size (mm)	QTY/20'CY (PCS)
				Color Box	Blow Case			
TA82001	2 Ton	85	330	10 / 11	10 / 11.5	534x216x145	548x230x160 / 583x251x156	1450 / 1300
T825010 T825010R	2 / 2.5 Ton	89	359	14.2 / 15.11	14.2 / 16.1	556x234x140 / 556x234x150	610x275x160 / 590x260x160	1008 / 1000
TA820037	2 Ton	80	380	11.4 / 12	11.4 / 13.2	566x206x130	610x275x145	1400
T82007	2 Ton	130	350	11 / 11.7	11 / 12.52	493x222x144	495x235x165	1430
T82003	2 Ton	130	375	11.8 / 12.3	11.8 / 13.2	531x223x140	555x250x160 / 580x250x160	1288 / 1188
T82253	2.25 Ton	130	375	11.8 / 12.3	11.8 / 13.2	531x223x140	555x250x160 / 580x250x160	1288 / 1188

Hydraulic Trolley Jack

2 TON

Complies with ASME Safety Standards

TA82005

NEW PRODUCT

Complies with ASME Safety Standards

3 TON

T83003C

2.5 TON

T83006F (With rotating handle)

T83006B

3 TON

Complies with ASME Safety Standards

3 TON

T830020

NEW PRODUCT

3 TON

T830013

Complies with ASME Safety Standards

Complies with ASME Safety Standards

3 TON

T830050

Model	Capacity	Min. Height (mm)	Max. Height (mm)	N.W. / G.W. (kg)	Product Size (mm)	Package Size (mm)	QTY/20'CY (PCS)
TA82005	2 Ton	135	385	10.3 / 11.3	520x195x135	530x205x145	1486
T83003C	3 Ton	130	410	19 / 20.36	625x242x158	675x285x180	768
T83006B	2.5 / 3 Ton	150	530	19.4 / 21.36	625x242x158	675x285x180	768
T83006F	2.5 / 3 Ton	150	530	19,6 / 21.5	625x242x158	675x285x180	768
T830020	3 Ton	135	400	16.7 / 17.3	592x240x146	630x280x165	936
T830013	3 Ton	135	380	13.6 / 14.7	531x225x135	580x235x155	1142
T830050	3 Ton	150	535	23.5 / 25.2	805x260x150	850x305x170	624

Trolley Jack Combo Set.

2 Ton Trolley Jack (TA820014)
Folding Creeper (TRH6454B)
Jack Stands (T42002X)

Complies with ASME Safety Standards

N.W.(kg): 17.6 kgs
G.W.(kg): 19 kgs
Package Size: 483x365x390 mm
QTY/20'CY: 330 PCS

2 Ton Trolley Jack (T820033X)
Wheel Chocks (TRF3553)
Work Gloves (TRY9007)
Knee Pad (TRL7001)

N.W.(kg): 9.55 kgs
G.W.(kg): 10.96 kgs
Package Size: 500x230x160 mm
QTY/20'CY: 1530 PCS

2 Ton Trolley Jack (T820033X)
Knock Down Creeper (TRH6454B)
Wheel Chocks (TRF3553)
2 Ton Jack Stand (T42002)
14" Lug Wrench
Size: 17/19/21/23 mm (TRX31101)

N.W.(kg): 20.75 kgs
G.W.(kg): 22.7 kgs
Package Size: 503x380x380 mm
QTY/20'CY: 330 PCS

2 Ton Trolley Jack (T820033X)
2 Ton Jack Stand (T42004)
Wheel Chock (TRF3553)
Knock Down Creeper (TRH6454B)
Oil pan (TRY2006YH)
14" Lug Wrench
Size: 17/19/21/23 mm (TRX31101)
Magnetic Dish (TRY60.0001)
Oilfilter Wrench (TRY032602)

N.W.(kg): 21 kgs
G.W.(kg): 23.5 kgs
Package Size: 480x390x395 mm
QTY/20'CY: 330 PCS

Combination Kit

2 Ton Trolley Jack (T820033X)
Folding Creeper (TRH6454B)
Wheel Chocks (TRF3553)
Knee Pad (TRL7001)

N.W.(kg): 15.4 kgs
G.W.(kg): 17.2 kgs
Package Size: 490x385x310 mm
QTY/20'CY: 462 PCS

2 Ton Combination Kit

2 Ton Trolley Jack (T820033X)
2 Ton Foldable Jack Stand (T42004)
Wheel Chocks (TRF3553)

N.W.(kg): 12.62 kgs
G.W.(kg): 14.5 kgs
Package Size: 535x315x180 mm
QTY/20'CY: 888 PCS

2 Ton Service Jack & Stands Combo

2 Ton Trolley Jack (T820033X)
3 Ton Jack Stands (T41507)
Wheel Chocks (TRF3553)
14" Lug Wrench (TRX31101)

N.W.(kg): 15.6 kgs
G.W.(kg): 17.2 kgs
Package Size: 460x270x493 mm
QTY/20'CY: 384 PCS

Hydranlic Garage Jack

2.25 TON

CE TZ822501

Complies with ASME Safety Standards

2.5 TON

T825021

TÜV GS CE

3 TON

T830025

Complies with ASME Safety Standards

3 TON

T83000F

Complies with ASME Safety Standards

3 TON

T830022

3 TON

T83000E

CE

Model	Capacity	Min. Height (mm)	Max. Height (mm)	Product Size (mm)	N.W. / G.W. (kg)	Package Size (mm)	QTY/20'CY (PCS)
TZ822501	2.25 Ton	130	465	572x328x175	27.3 / 28.8	615x375x200	540
T825021	2.5 Ton	140	520	675x344x180	34.5 / 36.1	733x380x225	450
T830025	3 Ton	130	465	572x328x175	28.2 / 29.7	620x380x215	540
T83000F	3 Ton	145	490	630x342x185	33.1 / 34.8	670x380x205	480
T83000E	3 Ton	150	490	630x344x180	35 / 36.4	670x380x205	460
T830022	3 Ton	140	520	660x344x180	35.3 / 36.6	733x380x225	455

Hydraulic Garage Jack

Special Quality Design

· Polished and treated cylinder rams use high performance seals.

· Polished inner cylinder walls extend the life of the seals to minimize abrasion and wear.

2.5 TON | 3 TON Complies with ASME Safety Standards

TZ830018

Low Profile 85 mm Min. Height

3 TON

T830018Z

Fast Lifting Dual Pump

3 TON

T83001

3 TON

T830023

Fast Lifting Dual Pump

3 TON | 3.5 TON Complies with ASME Safety Standards

T83502

Quick Lift Only One Pump

Model	Capacity	Min. Height (mm)	Max. Height (mm)	Product Size (mm)	N.W. / G.W. (kg)	Package Size (mm)	QTY/20'CY (PCS)
TZ830018	2.5 / 3 Ton	88	455	640x342x175	33.7 / 35.3	700x390x215	466
T83001	3 Ton	140	520	675x346x180	36.5 / 38.6	733x380x225	440
T83502	3 / 3.5 Ton	145	500	685x346x180	37.2 / 38.4	740x380x205	437
T830023	3 Ton	130	465	630x328x162	29.3 / 31	675x375x213	528
T830018Z	3 Ton	95	465	684x340x160	35.8 / 37.6	735x385x220	445

Professional Garage Jack

Patent No.: ZL200910182545.8
U.S.Patent No.:US8,297,595B2

Special Quality Design

· Polished and treated cylinder rams use high performance seals.

· Polished inner cylinder walls extend the life of the seals to minimize abrasion and wear.

Complies with ASME Safety Standards CE

2 TON / 3 TON

T830027

Low Profile 98 mm Min. Height

Fast Lifting Dual Pump

HEAVY DUTY

CE

Complies with ASME Safety Standards

2.5 TON

T830026

Low Profile 75 mm Min. Height

3 TON / 3.5 TON CE

T83508

Complies with ASME Safety Standards

Low Profile 98 mm Min. Height

Patent No.:ZL201230031779.5

Model	Capacity	Min. Height (mm)	Max. Height (mm)	Product Size (mm)	N.W. / G.W. (kg)	Package Size (mm)	QTY/20'CY (PCS)
T830027	2 / 3 Ton	98 / 245	580 / 585	795x335x170	43.5 / 45.3	860x400x200	370
T830026	2.5 Ton	75	515	722x328x150	33.8 / 35.7	780x400x185	470
T83508	3 / 3.5 Ton	98	535	760x345x170	43.3 / 45.3	815x400x200	370

Professional Garage Jack

2 TON

TZ820051

CE

3 TON

T830029

CE

4 TON CE

T84007

Complies with ASME Safety Standards

Model	Capacity	Min. Height (mm)	Max. Height (mm)	Product Size (mm)	N.W. / G.W. (kg)	Package Size (mm)	QTY/20'CY (PCS)
TZ820051	2 Ton	75	615	850x380x160	47.7 / 52	900x430x175	323
T830029	3 Ton	75	510	722x340x150	37.4 / 39.4	780x410x180	406
T84007	4 Ton	98	508	726x342x170	43.1 / 45.6	790x400x200	368

PROFESSIONAL GARAGE JACK

3 TON

COMMERCIAL 3 YEAR WARRANTY

Φ40mm Piston for saving operating power

Patent suppoting part with OE sealing

Patent sealing construction for long service life

1) W510 metal
2) integral welding with robots
3) 10mm thickness lifting arm&tie plate

DESIGNED TO LASTS 10 TIMES LONGER THAN TRADITIONAL JACKS
EXTEND LIFT UP TO 3,000+ LIFTING CYCLES

Two speed action
(Slow down with loading)
50KGS to active

Dead-man Principle
(Self-return handle)

Foot Padal

Magnetic
Tool Panel

CE

3 TON

TZA830003

Designed Rubber pad
(Φ130mm)

Fast Lifting Dual Pump

Nylon Wheel

Low Profile 95 mm Min. Height

Model	Capacity	Min Height (mm)	Max Height (mm)	Product Size (mm)	N.W. / G.W. (kg)	Package Size (mm)	QTY/20'CY (PCS)
TZA830003	3 TON	95	505	720x308x1195	41 / 43	820x380x190	400

www.tongrunjacks.com

Rubber Jack-Pad

Model	TRY8011
Diameter(mm)	100
Thickness(mm)	28
Package Size(mm)	530x360x225
QTY/CTN(PCS)	100

Applied Model: T820033 series, T820033X series, T82000D, T82000R, T82000CF, T82004, T82004C

Model	T820033E-2
Diameter(mm)	39
Thickness(mm)	15
Package Size(mm)	400x165x200
QTY/CTN(PCS)	100

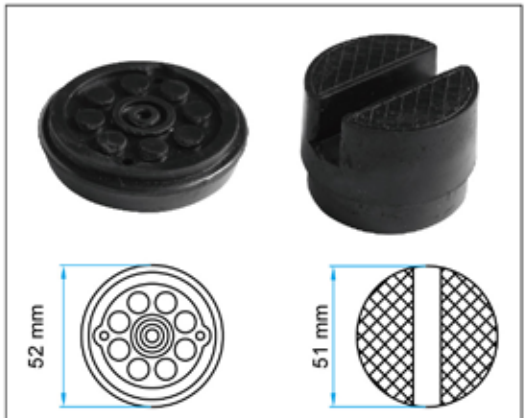

Applied Model: T825010 series, T825010C series, T820037, T830020

Model	T825010CE-2	T825010-9
Diameter(mm)	52	51
Thickness(mm)	13	37
Package Size(mm)	430x180x175	310x310x310
QTY/CTN(PCS)	100	60

Applied Model: T83006, T83006B, T83006C, T83006F

Model	T83006FE-3
Diameter(mm)	44
Thickness(mm)	15
Package Size(mm)	410x170x200
QTY/CTN(PCS)	100

Applied Model: T830021, T830022, T825021, T830021Q

Model	T830021-3
Diameter(mm)	137
Thickness(mm)	20
Package Size(mm)	400x280x320
QTY/CTN(PCS)	90

Applied Model: T830023, T830025

Model	T830025-8
Diameter(mm)	96.5
Thickness(mm)	23
Package Size(mm)	315x315x365
QTY/CTN(PCS)	135

Applied Model: T830018

Model	T830018-2
Diameter(mm)	96
Thickness(mm)	8
Package Size(mm)	315x315x320
QTY/CTN(PCS)	135

Applied Model: T82258, T83502, T83000E

Model	T83502-5
Diameter(mm)	127
Thickness(mm)	20
Package Size(mm)	572x572x320
QTY/CTN(PCS)	135

Applied Model: T82258, T83502, T83000E

Model	T83502T-3a
Diameter(mm)	106
Thickness(mm)	27
Package Size(mm)	350x350x425
QTY/CTN(PCS)	135

Nylon Wheel

FORNT WHEEL

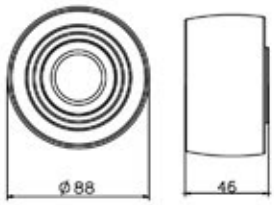

Applied Model: T83502 series, T830021 series, T83000F, T830022, T830021Q, T830021B, T83000E

Model	T830021-4
Diameter(mm)	88
Thickness(mm)	46
Materials	PA66

FORNT WHEEL

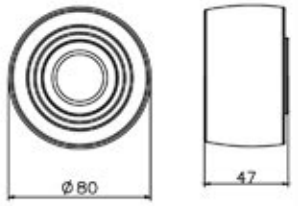

Applied Model: T83508 series, T830025 series, T830018Z series, T84008, T84007, T830023 series

Model	T830023B-1
Diameter(mm)	80
Thickness(mm)	47
Materials	PA66

FORNT WHEEL

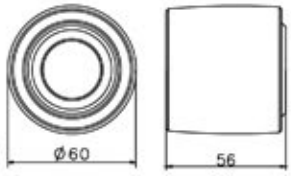

Applied Model: T830018 series, T830026 series

Model	T820010BL-3
Diameter(mm)	60
Thickness(mm)	56
Materials	PA66

REAR WHEEL

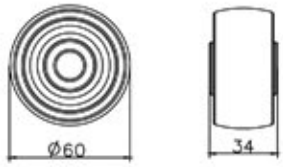

Applied Model: All Garage Jacks Series (Not Include T830008)

Model	T83508BC.2-2
Diameter(mm)	60
Thickness(mm)	34
Materials	PA66

FORNT WHEEL

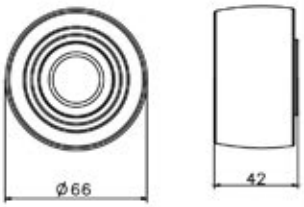

Applied Model: T825011CL series

Model	T825011BCL-4
Diameter(mm)	66
Thickness(mm)	42
Materials	PA66

REAR WHEEL

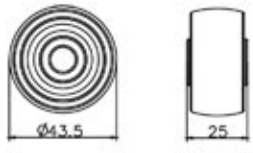

Applied Model: T825011CL series

Model	T825011BCL.2-1
Diameter(mm)	43.5
Thickness(mm)	25
Materials	PA66

Professional Garage Jack

Features:
- Professional stronger construction
- Compact and space-saving
- Protector, top saddle protection for safter lifting
- Polyamide wheels - for quietly positioning
- Long life using more than 1000 times
- 3 years guarantee

Products on this page are covered by international patents

Patent No.: ZL201110232918.5
ZL201210130146.9

Special Quality Design

· Polished inner cylinder walls extend the life of the seals to minimize abrasion and wear.

· Polished and treated pump cylinder pistons use high performance seals.

CE

1.5 TON
TR15006

2 TON
TR20006

1.5 TON
TR15005

2 TON
TR20005

Model	Capacity	Min. Height (mm)	Max. Height (mm)	Net Weight (kg)	Gross Weight (kg)	Package Size (mm)	QTY/20'CY (PCS)
TR15006	1.5 Ton	130	535	32	35.5	745x490x220	340
TR20006	2 Ton	130	535	33.5	37	775x490x220	340
TR15005	1.5 Ton	135	855	50	54	1135x490x220	220
TR20005	2 Ton	127	914	73.9	80	1635x490x220	140

Low Profile Garage Jack

Products on this page are covered by international patents

Patent No.:
ZL201220168382.5 ZL201220319166.6
ZL201210130197.1 ZL200920283713.8
ZL201210130146.9 ZL201210072632.X
ZL201030128868.2

Special Quality Design

- Polished and treated cylinder rams use high performance seals.

- Polished inner cylinder walls extend the life of the seals to minimize abrasion and wear.

- Polished and treated pump cylinder pistons use high performance seals.

- PU Material Front Wheel

- Nylon rear wheel with ball bearing

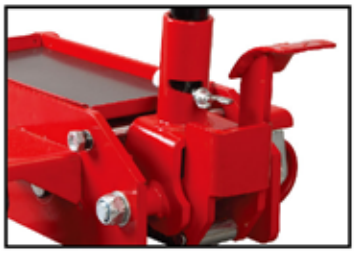

- Foot pedal for quick lifting saddle to load

- Magnetic tools tray for carrying objects

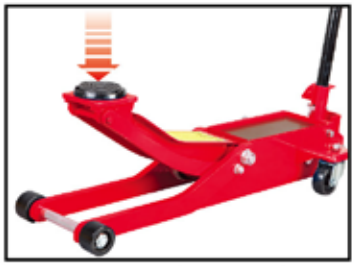

- Slowly down with loading, much safer

Model	Capacity	Min. Height (mm)	Max. Height (mm)	Product Size (mm)	N.W. / G.W. (kg)	Package Size (mm)	QTY/20'CY (PCS)
T820031	2 Ton	70	500	785x280x214	40 / 43	935x430x220	300
T820031DS	2 Ton	70	500	822x360x214	43 / 46	985x460x220	270
T820028	2 Ton	76	510	1006x365x136	45 / 48	1065x450x215	260

www.tongrunjacks.com

Low Profile Garage Jack

Products on this page are covered by international patents

Patent No.:
ZL201220168382.5 ZL201220319166.6
ZL201210130197.1 ZL200920283713.8
ZL201210130146.9 ZL201210072632.X
ZL201030128868.2

Special Quality Design

- Polished and treated cylinder rams use high performance seals.

- Polished inner cylinder walls extend the life of the seals to minimize abrasion and wear.

- Polished and treated pump cylinder pistons use high performance seals.

Model	T830031BS
Capacity	3 Ton
Min. Height(mm)	80
Max. Height(mm)	500
Product Size(mm)	822x420x232
N.W. / G.W. (kg)	53 / 57
Package Size(mm)	1015x510x210
QTY/20'CY(PCS)	242

3 TON
T830031BS

Low Profile 80 mm Min. Height

Double Nylon Wheels

Model	T830028
Capacity	3 Ton
Min. Height(mm)	140
Max. Height(mm)	525
Product Size(mm)	1150x350x180
N.W. / G.W. (kg)	47 / 51
Package Size(mm)	1295x420x240
QTY/20'CY(PCS)	189

3 TON
T830028

- Heavy duty nylon front wheel with ball bearing

- Nylon rear wheel with ball bearing

- Foot pedal for quick lifting saddle to load

- Magnetic tools tray for carrying objects

- Slowly down with loading, much safer

Aluminum Floor Jack

Model	T43004L	T430010L
Capacity	3 Ton	3 Ton
Min. Height	272 mm	268
Max. Height	397 mm	393
Product Size	190x173x272 mm	160x143x245
Package Size	800x290x180 mm	680x380x210
N.W./G.W.	4.5 / 4.63 (kg/pair)	4.2 / 4.6
QTY/CTN	6 pairs	6 pairs
QTY/20'CY	3522 PCS	2640 pairs

3 TON

T430010L

Model	T815012L
Capacity	1.25/1.5 Ton
Min. Height	85 mm
Max. Height	375 mm
Product Size	555x250x150 mm
Package Size	590x290x175 mm
N.W./G.W.	12.2 / 13.5 kg
QTY/20'CY	950 PCS

1.25 TON

1.5 TON

Complies with ASME Safety Standards

T815012L

3 TON

T43004L

Aluminum Racing jack

Model	T815009L
Capacity	1.5 Ton
Min. Height	85 mm
Max. Height	445 mm
Product Size	660x294x170 mm
Package Size	740x340x220 mm
N.W./G.W.	19.5 / 21.5 kg
QTY/20'CY	480 PCS

1.5 TON

T815009L

Fast Lifting Dual Pump

Model	T820010L
Capacity	2 Ton
Min. Height	90 mm
Max. Height	440 mm
Product Size	670x310x163 mm
Package Size	740x405x205 mm
N.W./G.W.	21.4 / 23.2 kg
QTY/20'CY	460 PCS

2 TON

T820010L

Fast Lifting Dual Pump

Aluminum Racing Jack

2.5 TON
T830003L
CE

3 TON
T830003L
Complies with ASME Safety Standards

Easy Carrying

Fast Lifting Dual Pump

1.5 TON
T815013L
CE

Low Profile 98 mm Min. Height

Low Profile 85 mm Min. Height

Patent No.:ZL201430455228.0

Model	Capacity	Min. Height(mm)	Max. Height(mm)	Product Size(mm)	Package Size(mm)	N.W./G.W.(kg)	QTY/20'CY (PCS)
T815013L	1.5 Ton	85	365	573X253X137	620X295X180	12 / 13.3	790
T830003L	2.5 / 3 Ton	98	480	730X320X180	790X385X220	24.4 / 26.1	420

Aluminum / Steel Floor Jack

Model	T815016L
Capacity	1.5 Ton
Min. Height	90 mm
Max. Height	358 mm
Package Size	595x295x180
N.W./G.W.	14.3 / 15.6
QTY/20'CY	950 PCS

Fast Lifting Dual Pump

- Fast action with dual lifting pistons
- Rubber padded saddle rotates 360 degree to provide protection and stability
- Durable, light-weight steel and aluminum construction

T815016L

Aluminum / Steel Floor Jack

Model	T815021L
Capacity	1.5 Ton
Min. Height(mm)	90
Max. Height(mm)	365
Product Size(mm)	576x250x154
Package Size(mm)	645x310x185
N.W./G.W.(kg)	16.5 / 17.6
QTY/20'CY (PCS)	750

1.5 TON

T815021L

Model	T825011CL
Capacity	2.5 Ton
Min. Height(mm)	100
Max. Height(mm)	465
Product Size(mm)	659X289X165
Package Size(mm)	720X350X200
N.W./G.W.(kg)	26.3 / 27.8
QTY/20'CY (PCS)	528

T825011CL

Aluminum / Steel Racing Jack

3 TON

T830011L

Fast Lifting Dual Pump

Low Profile

Model	T830011L
Capacity	3 Ton
Min. Height(mm)	100
Max. Height(mm)	465
Product Size(mm)	659X292X165
Package Size(mm)	720X350X200
N.W./G.W.(kg)	27 / 28.5
QTY/20'CY (PCS)	528

Heavy Duty Long Floor Jack

CE

2 TON
TR20003

5 TON
TR50001

3 TON
TR30001

3 TON
TR30002

- Ideal for lifting heavy trucks, buses, agriculture and constructions equipments.
- Heavy duty steel frame for maximum durability.
- Long frame for easy access lift point.
- Safety-overload system.
- Additional foot pedal control provides quick set-up and rise.
- Oversized swivel casters for easy mobility.

10 TON
TR100001

15 TON
TRA150001-1
TRA150001-K(Quick Lift)

20 TON
TRA200001-1
TRA200001-K(Quick Lift)

Model	Capacity	Min. Height (mm)	Max. Height (mm)	Product Size (mm)	N.W. / G.W. (kg)	Package Size (mm)	QTY/20'CY (PCS)
TR20003	2 Ton	140	800	1184X435X188	58 / 64	1275x480x230	200
TR30001	3 Ton	130	600	1312X400X188	65 / 71.5	1465x435x215	180
TR30002	3 Ton	140	670	1100X436X186	54 / 60	1185x480x230	200
TR50001	5 Ton	150	570	1412X418X186	85 / 100	1618x475x350	90
TR100001	10 Ton	160	560	1540X486X255	129 / 150	1710x525x395	65
TRA150001-1	15 Ton	220	680	1550X560X305	165 / 180	1703x523x384	95
TRA150001-K	15 Ton	220	680	1550X560X305	165 / 180	1650X370X430	95
TRA200001-1	20 Ton	220	680	1550X560X305	215 / 230	1650X370X430	75
TRA200001-K	20 Ton	220	680	1550X560X305	215 / 230	1650X370X430	75

Pneumatic Jack

Model	TRA25-2A	TRA40-2A	TRA50-2A	TRA80-2A
Capacity	25T/10T	40T/20T	50T/25T	80T/50T
Air Pressure	0.9-1.2Mpa	0.9-1.2Mpa	0.9-1.2Mpa	0.9-1.2Mpa
Min. Height (mm)	185	190	215	230
Lifting Height	25T:97mm 10T:95mm	40T:106mm 20T:88mm	50T:115mm 25T:114mm	80T:111mm 50T:102mm
Extension Height (mm)	75+45	75+ 45	75+45	75+45
N.W. / G.W. (kg)	53 / 59	62 / 70	73 / 80	106 / 115
Package Size (mm)	840x300x270	840x300x270	840x290x230	980x390x320
Handle Box (mm)	1390x280x110	1390x280x110	1390x280x110	1390x280x110
QTY / 20'CY (PCS)	160	160	160	150

PROFESSIONAL **PNEUMATIC** CE

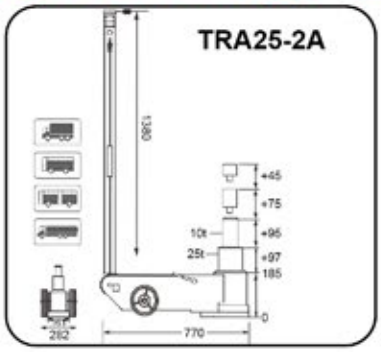

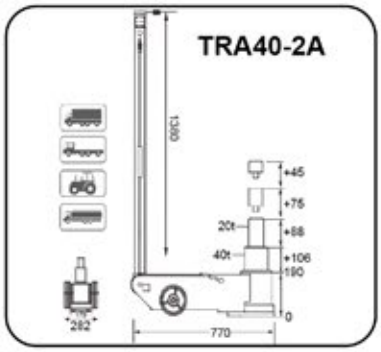

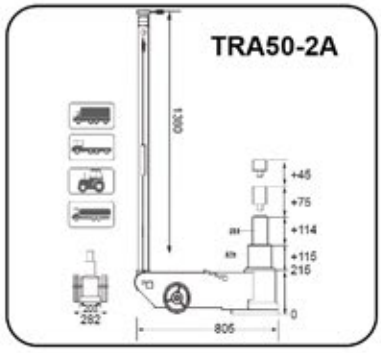

TRA25-2A
25 Ton / 10 Ton

TRA40-2A
40Ton / 20 Ton

Chrome Plated Cylinder

TRA50-2A
50 Ton / 25 Ton

Release Safely

TRA80-2A
80 Ton / 50 Ton

www.tongrunjacks.com

Pneumatic Jack

Model	TRA30-2AL / TRA40-2AL	TRA40-3AL	TRA50-3A	TRA60-3AL	TRA60-4A
Capacity	30T/15T 40T/20T	40T/20T/10T	50T/25T/10T	60T/40T/20T	60T/40T/22T/11T
Air Pressure	0.9-1.2Mpa	0.9-1.2Mpa	0.9-1.2Mpa	0.9-1.2Mpa	0.9-1.2Mpa
Min. Height (mm)	170 / 170	125	160	150	150
Lifting Height	30T:86mm 40T:88mm 15T:83mm 20T:81mm	40T:57mm 20T:49mm 10T:53mm	50T:62mm 25T:61mm 10T:69mm	60T:57mm 40T:59mm 20T:61mm	60T:57mm 40T:60mm 22T:61mm 11T:65mm
Extension Height (mm)	75+45	75+45	75+45	75+45	75+45
N.W. / G.W. (kg)	53 / 56	44 / 50	57 / 60	64 / 67	62 / 65
Package Size (mm)	620x300x250	870x330x220	890x290x230	1000x300x240	1000x300x240
Handle Box (mm)	1390x280x110	1390x280x110	1390x280x110	1390x280x110	1390x280x110
QTY / 20'CY (PCS)	190	160	160	160	160

PROFESSIONAL **PNEUMATIC**

TRA30-2AL **30Ton / 15Ton**
TRA40-2AL **40Ton / 20Ton**

TRA40-3AL
40 / 20 / 10Ton

CE

TRA50-3A
50 / 25 / 10 Ton

TRA60-3AL
60 / 40 / 20 Ton

TRA60-4A
60 / 40 / 22 / 11 Ton

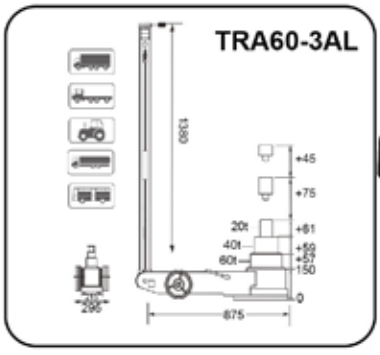

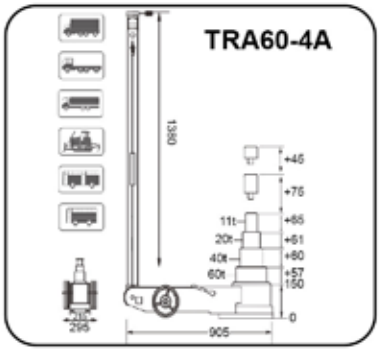

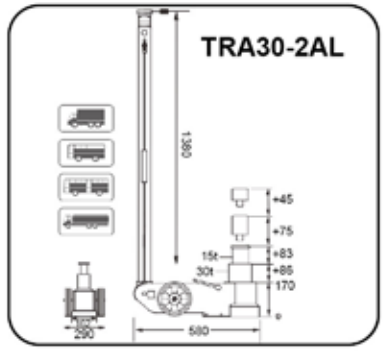

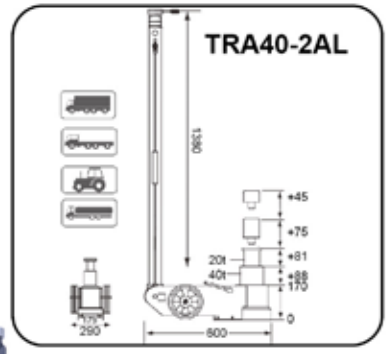

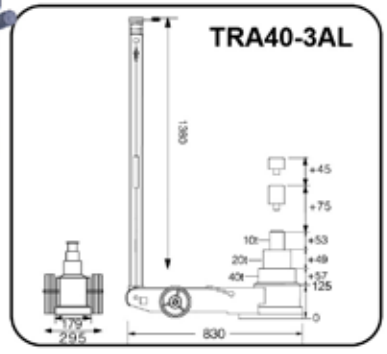

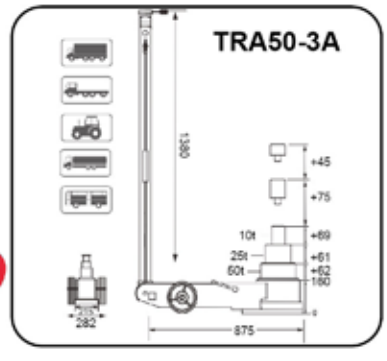

www.tongrunjacks.com

Pneumatic Jack (For Common)

TRA30SP
30 Ton / 15 Ton

TRAS30-1H **TRAS60-1H**
30 Ton **60 Ton**

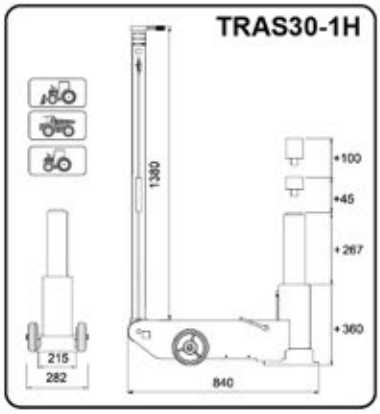

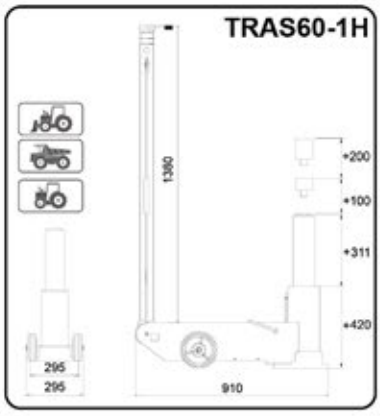

Chrome Plated Cylinder

PROFESSIONAL
PNEUMATIC

CE

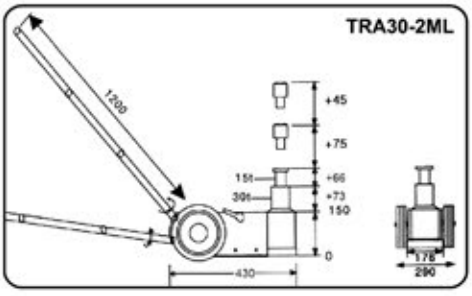

TRA30-2ML
30 Ton / 15 Ton

Model	TRA30SP	TRAS30-1H TRAS60-1H	TRA30-2ML
Capacity	30Ton / 15Ton	30Ton / 60Ton	30Ton / 15Ton
Air Pressure	0.9-1.2Mpa	0.9-1.2Mpa	0.9-1.2Mpa
Min. Height (mm)	150	360/420	150
Lifting Height	30T:73mm 15T:66mm	30T:267mm / 60T:311mm	30T:73mm 15T:66mm
Extension Height (mm)	75+45	100+45 / 100+200	75+45
N.W. / G.W. (kg)	24 / 30	87 / 126	30 / 35
Package Size (mm)	700x290x270	940x380x520 / 935x325x460	500x280x210
Handle Box (mm)	/	/	/
QTY / 20'CY (PCS)	250	140	240

Release Safely

www.tongrunjacks.com

Pneumatic Jack

TRA22-1
22 Ton

NEW PRODUCT

3000+times
Lifty cycles

TQ22001
22 Ton

TQ35001
(TRA1350)
35 Ton

Model	Capacity	Min. Height (mm)	Max. Height (mm)	Ram Lift (mm)	Screw Extend (mm)	Air Pressure (Mpa)	N.W. / G.W. (kg)	Package Size (mm)	QTY/20'CY (PCS)
TQ22001	22 Ton	220	435	110	105	0.7 ~ 1.2	45 / 47	675x390x260	352
TRA22-1	22 Ton	215	456	141	78	0.9 ~ 1.2	40 / 45	590x300x290	330
TQ35001 (TRA1350)	35 Ton	250	495	130	115	0.7 ~ 1.2	46 / 48	675x390x260	350

Hydraulic Portable Body Repair Kits

Blow Mold Case

T710015
10 Ton

NOTE: T710015
Includes: Hand pump, hose, cylinder ram, spreader ram, rubber head, ram toe, cleft cap, V cap, plunge toe, quincunx, chain

Model	T710015
Capacity	10 Ton
Package Size (mm)	750x480x265
N.W. / G.W. (kg)	36 / 41.5
QTY / 20'CY (PCS)	388

Hydraulic Portable Body Repair Kits

Model	TRA0204-1
Capacity	20 Ton
Lifting Height (mm)	125
Min. Ram Height (mm)	278
Package Size (mm)	Fig.1# 760x330x260 Fig.2# 690x400x130
N.W. / G.W. (kg)	Fig.1# 25.5 / 33 Fig.2# 26.5 / 34
QTY / 20'CY (PCS)	280

TRA0204-1
20 Ton

Metal Case

T70402S
4 Ton

Model	T70402S
Capacity	4 Ton
Min. Ram Hight (mm)	330
Ram Lifting Hight (mm)	120
N.W. (kg)	14.5
G.W. (kg)	17.5
Package Size	620X350X210
QTY / 20'CY (PCS)	594

T71002L
10 Ton

Model	T71002L
Capacity	10 Ton
Min. Ram Hight (mm)	470
Ram Lifting Hight (mm)	150
N.W. (kg)	27
G.W. (kg)	34
Package Size	940x415x210
QTY / 20'CY (PCS)	352

Portable Hydraulic Body Repair Kit

T70401
4 Ton

Model	T70401
Capacity	4 Ton
Min. Ram Hight (mm)	270
Ram Lifting Hight (mm)	120
N.W. (kg)	17
G.W. (kg)	Fig. 1# 21 Fig. 2# 20
Package Size (mm)	Fig. 1# 590x250x190 (Metal Box)
	Fig. 2# 590x370x195 (Blow Mold Case)
QTY / 20'CY (PCS)	Fig. 1# 800 Fig. 2# 594

Fig. 1
Metal Case

Fig. 2
Blow Mold Case

Model	T71001
Capacity	10 Ton
Min. Ram Hight (mm)	380
Ram Lifting Hight (mm)	150
N.W. (kg)	31
G.W. (kg)	Fig. 1# 38 Fig. 2# 36
Package Size (mm)	Fig. 1# 800x315x180 (Metal Box)
	Fig. 2# 830x445x195 (Blow Mold Case)
QTY / 20'CY (PCS)	Fig. 1# 442 Fig. 2# 352

T71001
10 Ton

Fig. 1
Metal Case

Fig. 2
Blow Mold Case

T71001L
10 Ton

Model	T71001L
Capacity	10 Ton
Min. Ram Hight (mm)	380
Ram Lifting Hight (mm)	150
N.W. (kg)	31
G.W. (kg)	38.8
Package Size	1030x480x220
QTY / 20'CY (PCS)	220

Patent No.: ZL201130038189.0

Hydraulic Ram & Hand Pump

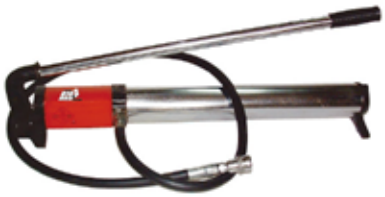

TRB0.6L 0.6L
TRB1L 1L
TRB2L 2L

Model	TRB0.6L	TRB1L	TRB2L
Pressure Capacity	63 Mpa	63 Mpa	63 Mpa
Oil Capacity (high pressure)	2.6 ml/time	3 ml/time	3 ml/time
Oil Capacity (low pressure)	11.5 ml/time	20 ml/time	20 ml/time
Total Oil Capacity	0.6 L	1.0 L	1.9 L
Package Size (mm)	590x115x155	700x140x170	710x150x190
N.W. / G.W. (kg)	6 / 6.7	9 / 10	13 / 14.1
QTY / 20'CY (PCS)	2900	2000	1400

TRB2005
5 Ton

TRB2010
10 Ton

TRB2015
15 Ton

TRB2020
20 Ton

TRB2030
30 Ton

TRB2050
50 Ton

TRB2075
75 Ton

TRB2100
100 Ton

TRB2150
150 Ton

Model	TRB2005	TRB2010	TRB2015	TRB2020	TRB2030	TRB2050	TRB2075	TRB2100	TRB2150
Capacity	5 Ton	10 Ton	15 Ton	20 Ton	30 Ton	50 Ton	75 Ton	100 Ton	150 Ton
Min. Height (mm)	40	45	50	60	65	75	85	95	118
Lift Height (mm)	9	11	13	17	17	19	21	25	30
Product Size (mm)	63x44x40	78x56x45	92x68x50	104x80x60	125x100x65	153x125x75	186x155x85	206x175x95	247x215x118
Work Pressure (Mpa)	51	51.9	60.1	59.1	58.5	62.5	59.9	63.7	61.2
N.W. / G.W. (kg)	0.75 / 1.2	1.3 / 1.8	2 / 2.5	3.1 / 3.9	5 / 5.8	8.8 / 9.7	15.3 / 16.1	21 / 23	40 / 41.5
Package Size (mm)	70x50x43	85x65x50	102x77x55	110x85x65	130x105x70	160x130x80	190x160x90	215x180x100	250x220x120
QTY / 20'CY (PCS)	16000	11000	8000	5100	3400	2000	1200	890	480

Hand Operated Pump

Pressure Gauge

Complies with ASME Safety Standards

T71001B1
10 Ton

Pressure Gauge

T70401B1
4 Ton

Model	Capacity	N.W. / G.W. (kg)	Package Size (mm)	QTY/20'CY (PCS)
T70401B1	4 Ton	6.2 / 6.7	555x170x180	1584
T71001B1	10 Ton	7.2 / 7.7	695x170x180	1248

Pull-back Ram

TRK1220
20 Ton

TRK1210
10 Ton

TRK1205
5 Ton

TRK1202
2 Ton

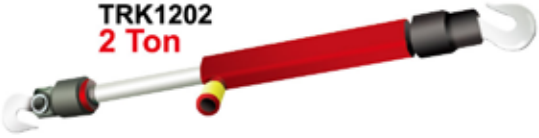

Model	Capacity	Max. Length (mm)	Storke (mm)	N.W. / G.W. (kg)	Package Size (mm)	QTY/20'CY (PCS)
TRK1202	2 Ton	575	120	22 / 24	600x290x230	4200
TRK1205	5 Ton	665	130	33 / 35	690x290x230	4000
TRK1210	10 Ton	715	130	32 / 34	680x340x210	2000
TRK1220	20 Ton	980	200	20 / 21	930x205x135	850

Portable Hydraulic Repair Ram Kit

Model	TRK02001-1 (Metal Case)
N.W. / G.W. (kg)	23 / 24
Package Size (mm)	650x450x110
QTY / 20'CY (PCS)	750

Model	TRK02001-S (Blow Mold Case)
N.W. / G.W. (kg)	22 / 23
Package Size (mm)	530x500x110
QTY / 20'CY (PCS)	780

TRK0202A:
Stroke: 73 mm
Min.Height: 126 mm

TRK0210B:
Stroke: 135 mm
Min.Height: 358 mm

TRK0205B:
Stroke: 130 mm
Max.Length: 665 mm

TRK0210A:
Stroke: 58 mm
Min.Height:118 mm

TRK0204A:
Stroke: 18 mm
Min.Height: 40 mm

TRK0202B:
Stroke: 120 mm
Max.Length: 575 mm

TRK0204B:
Stroke: 125 mm
Min.Height: 270 mm

Air Hydraulic Pump

TRA5200

Model	TRA5200
Work Pression	70 Mpa
Oil Tank	1.6L
N.W. / G.W. (kg)	16.8 / 17.3
Package Size (mm)	340x310x250
QTY / CTN (PCS)	2
QTY / 20'CY (PCS)	2000

Model	TRA3401
Work Pression	70 Mpa
Oil Tank	0.625L
N.W. / G.W. (kg)	14.5 / 15
Package Size (mm)	410x390x220
QTY / CTN (PCS)	2
QTY / 20'CY (PCS)	2000

For use with a variety or rams, pressing tools and hydraulic tools. Operates at 10,000 PSI. Air Pressure 0.6-1.0 Mpa

TRA3401

Scissor Jack

NEW PRODUCT

T101010
1 Ton

Hydraulic Pump

T10060
0.6 Ton

T10080
0.8 Ton

T10102-GS
1 Ton

T10202-GS
2 Ton

T10152-GS
1.5 Ton

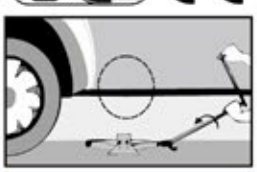

T10152D
1.5 Ton

Optional Saddles Available.

Model	Capacity	Min. Height (mm)	Max. Height (mm)	Total Length (mm)	Stroke With Rated load (mm)	N.W. / G.W. (kg)	Package Size (mm)	QTY/ CTN (PCS)	QTY/20'CY (PCS)
T101010	1 Ton	138	355	380	/	6.78/7.88	428x320x205	2	2000
T10060	0.6 Ton	85	330	375	/	2 / 2.3	415x400x260	10	8400
T10080	0.8 Ton	85	330	375	/	2.1 / 2.4	415x400x260	10	8400
T10102-GS	1 Ton	88	380	426	200-370	2.5 / 2.8	500x455x255	10	4950
T10152-GS	1.5 Ton	95	390	450	230-390	3.3 / 3.5	660x470x230	10	3600
T10202-GS	2 Ton	120	395	450	260-390	3.5 / 4	660x470x260	10	4800
T10152D	1.5 Ton	95	390	450	/	4 / 4.2	460x395x225	6	4164

Industrial Toe Jack

TRJ7102
2 Ton

TRJ7105
5 Ton

360° Rotating Handle

Head Support

Toe Support

Model	Toe Capacity	Head Capacity	Min. Toe Height (mm)	Max. Toe Height (mm)	Min. Head Height (mm)	Max. Head Height (mm)	Base Size (mm)	N.W. / G.W. (kg)	Package Size (mm)	QTY/20'CY (PCS)
TRJ7102	2 Ton	3 Ton	15.8	128.5	238	349	127x177.8	10/10.5	265x200x310	1900
TRJ7105	5 Ton	6 Ton	22.2	141.3	298.5	409.5	270x184	22.5/23	320x257x358	800
TRJ7110	10 Ton	14 Ton	28.6	173	333.4	460.4	285.8x241.3	33.5/34	365x298x395	450

TRJ7205
5 Ton

Model	Toe Capacity	Head Capacity	Min. Toe Height (mm)	Max. Toe Height (mm)	Min. Head Height (mm)	Max. Head Height (mm)	N.W. / G.W. (kg)	Package Size (mm)	QTY/20'CY (PCS)
TRJ7205	2 Ton	5 Ton	25	230	368	573	22.5/25	365x200x430	700
TRJ7210	5 Ton	10 Ton	30	260	420	650	32.5/35	380x225x485	500
TRJ7225	10 Ton	25 Ton	58	273	505	720	109 / 116	530x350x610	150

Ratchet Steel Jack

TRJ7310-5T
5 Ton

TRJ7310-10T
10 Ton

TRJ7310-16T
16 Ton

TRJ7310-20T
20 Ton

TRJ7310-1.5T
1.5 Ton

TRJ7310-3T
3 Ton

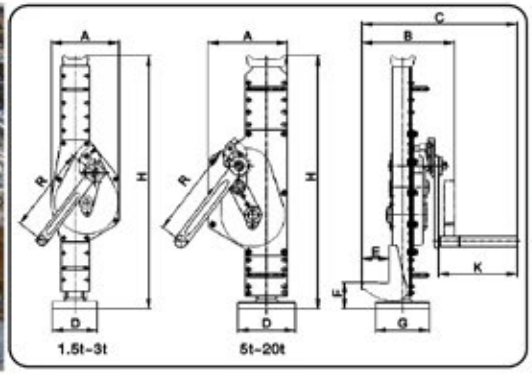

Model		TRJ7310-1.5T	TRJ7310-3T	TRJ7310-5T	TRJ7310-10T	TRJ7310-16T	TRJ7310-20T
Rated Capacity(Ton)		1.5	3	5	10	16	20
Stroke(mm)		300	350	350	410	320	320
Min. Height(mm)	F	60	70	80	85	95	100
Max. Height(mm)	H	600	730	730	800	800	860
Product Size(mm)	A	163	197	189	250	275	275
	B	190	200	239	293	320	335
	C	273	296	335	498	514	529
	D	100	130	140	140	150	150
	E	55	60	71	86	78	78
	G	110	140	170	170	180	180
	K	113	127	127	248	250	250
	R	225	250	275	300	300	380
N.W./G.W.(kg)		13.5 / 16	21.2 / 22	28.5 / 30	46.8 / 49	65 / 68	75 / 78
Package size(mm)		620x180x190	760x260x230	790x220x280	850X290X340	850x320x350	920x320x350
QTY/20'CY(PCS)		1100	743 PCS	534 PCS	310 PCS	273 PCS	230 PCS

Air Jack

TRA3812
2 Ton

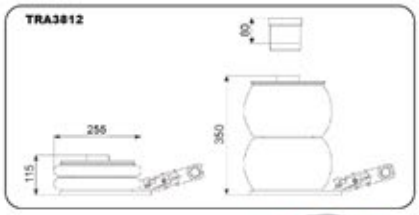

TRA3813
2 Ton

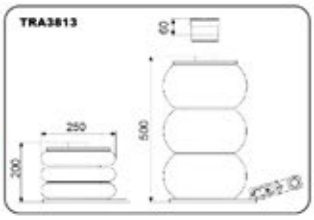

TRA1812
2 Ton

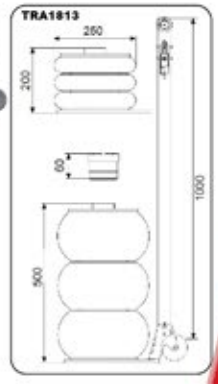

TRA1813
2 Ton

Model	TRA3812	TRA1812	TRA3813	TRA1813
Capacity	2 Ton	2 Ton	2 Ton	2 Ton
Min. Height(mm)	115	115	200	200
Max. Height(mm)	430	430	560	560
Lifting Time	3 sec	3 sec	4 sec	4 sec
Working Temp	-60°C ~ 50°C	-60°C ~ 50°C	-60°C ~ 50°C	-60°C ~ 50°C
N.W. / G.W. (kg)	15 / 16	18 / 19	16 / 17	19 / 20
Package Size (mm)	510x290x140	1300x280x140	490x280x230	1300x280x220
QTY/20'CY (PCS)	850	450	700	270

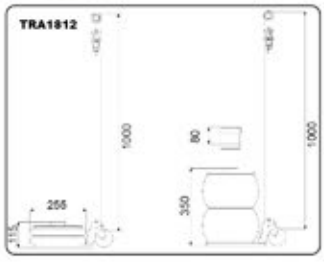

Off-Road Jack

- Multi-functional tool is great for lifting tractors or heavy trucks, pulling posts and poles, and even serves as an all-purpose hoist or winch.

TRA8205 20” TRA8335 33” TRA8485 48” TRA8605 60”

Model	TRA8205	TRA8335	TRA8485	TRA8605
Capacity	3 Ton	3 Ton	3 Ton	3 Ton
Base Size (mm)	177.8x114.3	177.8x114.3	177.8x117.4	177.8x117.4
Product Height (mm)	508	838.2	1219.2	1524
Min.Height (mm)	125	125	125	125
Max.Height (mm)	318	660	1020	1330
N.W. / G.W. (kg)	9 / 10	11 / 12	14 / 15	14.5 / 15.5
Package Size (mm)	540x250x140	865x255x150	1255x255x150	1555x255x150
QTY/20'CY (PCS)	1320	950	650	550

TRA8485(GS) 48” TRA8605(GS) 60”

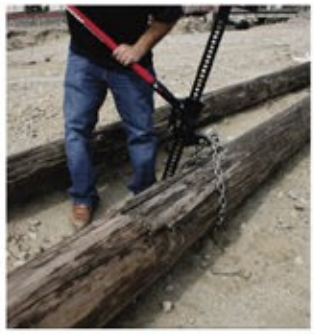

Model		TRA8485(GS)	TRA8605(GS)
Max. SupportLoad (kg)	130 mm ≤H＜300 mm	2000 kgs	2000 kgs
	300 mm≤ H＜500 mm	1600 kgs	1600 kgs
	H ≥ 500 mm	500 kgs	500 kgs
Lifting Range (mm)		130-1060	130-1325
Base Size (mm) (WxLxT)		260x120x5	260x120x5
N. W. / G.W. (kg)		13 / 14	14.5 / 15.5
Package Size (mm)		1255x250x145	1555x250x145
QTY/20'CY (PCS)		580	480

Wheel Chocks

TRF3553

Model	TRF3553
Product Size	105x85x90 mm
N.W. / G.W.	0.7 kgs/pair / 0.8 kgs/pair
Package Size	370x230x120 mm
QTY/CTN	10 pairs
QTY/20'CY	20000 pairs

Steel

One Piece

TRTS001

Model	TRTS001
Product Size	220x195x155mm
N.W. / G.W.	2.2 kgs / 2.45 kgs
Package Size	350x300x225mm
QTY/CTN	8 PCS
QTY/20'CY	9000 PCS

Rubber

TRF3553-1

Model	TRF3553-1
Product Size	105x85x90 mm
N.W. / G.W.	0.7 kgs/pair / 0.8 kgs/pair
Package Size	370x230x120 mm
QTY/CTN	10 pairs
QTY/20'CY	20000 pairs

Steel

Rubber Mat

One Piece

TRTS007

Model	TRTS007
Product Size	230x180x140 mm
N.W. / G.W.	3.5 kgs / 4 kgs
Package Size	500x360x180mm
QTY/CTN	6 PCS
QTY/20'CY	4500 PCS

Rubber

TRF3554

Model	TRF3554
Product Size	152x125x52mm
N.W. / G.W.	0.91 kgs/pair 0.94 kgs/pair
Package Size	445x285x170mm
QTY/CTN	16 pairs
QTY/20'CY	21000 pairs
MOQ	160 pairs

Steel

For SUV

One Piece

TRTS002

Model	TRTS002
Product Size	280x240x180mm
N.W. / G.W.	5.7 kgs / 6 kgs
Package Size	500x360x180mm
QTY/PLT	4 PCS
QTY/20'CY	3200 PCS

Rubber

TRN37-2

Model	TRN37-2
Product Size	326x204x161 mm
N.W. / G.W.	4.8 kgs/pair / 5.3 kgs/pair
Package Size	370x240x170 mm
QTY/CTN	2 PCS
QTY/20'CY	2000 PCS

Steel

For Truck

One Pair

TRF3301

Model	TRF3301
Product Size	129x106x78mm
N.W. / G.W.	0.66 kgs/pair / 0.96 kgs/pair
Package Size	450x175x115mm
QTY/CTN	10 pairs
QTY/20'CY	20000 pairs

Rubber

TRF3555

Model	TRF3555
Product Size	230x220x12.5 mm
N.W. / G.W.	2.1 kgs/pair 2.2 kgs/pair
Package Size	295x233x260 mm
QTY/CTN	2 PCS
QTY/20'CY	2500 PCS

Steel

For Truck

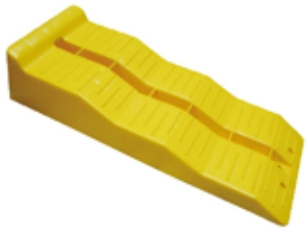

TRTS570

Model	TRTS570
Product Size	560x195x125mm
N.W. / G.W.	1.3 kgs / 1.5 kgs
Package Size	625x428x435mm
QTY/CTN	12 PCS
QTY/20'CY	2800 PCS

Plastic

Jack Stand

T42002
T42002X
2 Ton

T43002
T43002X
3 Ton

T46002
6 Ton

T412002
12 Ton

- Ratchet style allows for fine adjustment and fast removal.
- Solid steel handle, Self-Locking ratchet
- Large saddle, unitized frame construction
- Ductile iron rack

Complies with ASME Safety Standards

Model	Capacity	Min. Height (mm)	Max. Height (mm)	N.W. / G.W. (kg)	Package Size (mm)	QTY/20'CY
T42002	2 Ton	275	420	4.75 / 5.1	195x180x355	2088 pairs
T42002X	2 Ton	250	380	4.7 / 4.9	200x160x315	2740 pairs
T43002	3 Ton	285	425	6.3 / 6.8	210x190x360	1900 pairs
T43002X	3 Ton	270	410	5.9 / 6.2	195x180x330	2352 pairs
T46002	6 Ton	390	605	12.4 / 13.2	290x260x460	810 pairs
T412002	12 Ton	465	715	26.3 / 27.1	320x300x580	620 pairs

T42001
2 Ton

T43001
3 Ton

T46001
6 Ton

T410001
10 Ton

Large foot base for added support

Model	Capacity	Min. Height (mm)	Max. Height (mm)	N.W. / G.W. (kg)	Package Size (mm)	QTY/20'CY
T42001	2 Ton	278	423	5.0 / 5.3	210x195x360	1800 pairs
T43001	3 Ton	288	428	6.6 / 7.05	225x205x365	1650 pairs
T46001	6 Ton	395	613	12.9 / 13.7	310x265x465	735 pairs
T410001	10 Ton	468	718	27.8 /29.0	340x310x570	448 pairs

Double Locking Jack Stand

Complies with ASME Safety Standards

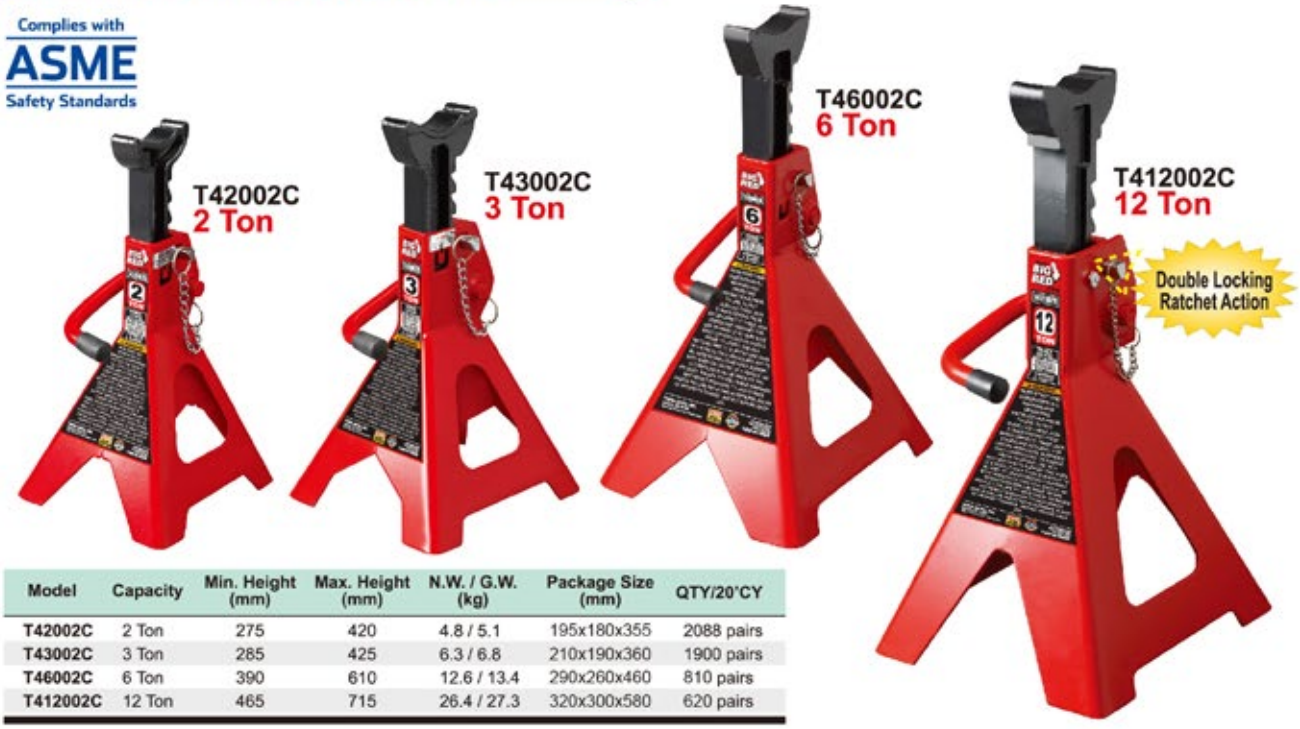

Model	Capacity	Min. Height (mm)	Max. Height (mm)	N.W. / G.W. (kg)	Package Size (mm)	QTY/20'CY
T42002C	2 Ton	275	420	4.8 / 5.1	195x180x355	2088 pairs
T43002C	3 Ton	285	425	6.3 / 6.8	210x190x360	1900 pairs
T46002C	6 Ton	390	610	12.6 / 13.4	290x260x460	810 pairs
T412002C	12 Ton	465	715	26.4 / 27.3	320x300x580	620 pairs

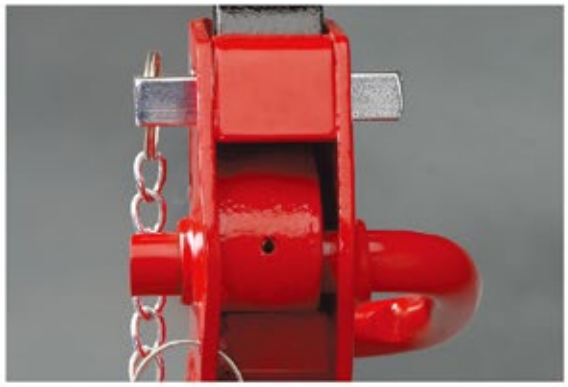

Model	Capacity	Min. Height (mm)	Max. Height (mm)	N.W. / G.W. (kg)	Package Size (mm)	QTY/20'CY
T42001C	2 Ton	278	428	5.0 / 5.3	210x195x360	1800 pairs
T43001C	3 Ton	288	428	6.6 / 7.05	225x205x365	1650 pairs
T46001C	6 Ton	395	613	12.9 / 13.7	310x265x465	735 pairs
T410001C	10 Ton	468	718	27.8 / 29.0	340x310x570	448 pairs

www.tongrunjacks.com

Foldable Jack Stand

T42004
2 Ton

T43004
3 Ton

T46004
6 Ton

Model	T42004	T43004	T46004
Capacity	2 Ton	3 Ton	6 Ton
Min. Height (mm)	277	285	375
Max. Height (mm)	365	400	570
N.W. / G.W. (kg)	3.38 / 3.58	3.88/ 4.11	8.27 / 8.85
Package Size (mm)	530x280x315	630x300x320	540x290x480
QTY / CTN	10 pairs	10 pairs	4 pairs
QTY / 20'CY	4730 pairs	4080 pairs	1280 pairs

Foldable Screw Jack Stand

HEAVY DUTY

TRF3201
12 Ton

TRF3202
12 Ton

Adjustable
Screw Height

Model	TRF3202	TRF3201
Capacity	12 Ton	12 Ton
Min. Height (mm)	710	456
Max. Height (mm)	1065	710
N.W. / G.W. (kg)	25 / 26.5	18.5 / 19.5
Package Size (mm)	210x410x880	210x410x610
QTY / 20'CY (PCS)	480	480

Welded Tripod Jack Stand

T41007-GS
2 Ton/pair
Conforms to BS AU
223a:2006

T41507G-GS
3 Ton/pair
Conforms to BS AU
223a:2006

T41507BS
3 Ton/pair
Conforms to BS AU
223a:2006

T43007G-GS
3 Ton

Model	T41007-GS	T41507G-GS
Capacity	2 Ton/pair	3 Ton/pair
Min. Height (mm)	291	322
Max. Height (mm)	391	490
N.W. / G.W. (kg)	3.5 / 4	5.2 / 5.8
Package Size (mm)	310x230x265	380x300x312
QTY / 20'CY (PCS)	1400 pairs	798 pairs

Model	T41507BS	T43007G-GS
Capacity	3 Ton/pair	3 Ton
Min. Height (mm)	270	335
Max. Height (mm)	360	500
N.W. / G.W. (kg)	3.6 / 4.1	4.7 / 5.2
Package Size (mm)	310x230x260	410x300x360
QTY / 20'CY (PCS)	1440 pairs	594 pairs

Heavy-Duty Vehicle Support Stand

PROFESSIONAL

T410009G
10 Ton

T412009A
12 Ton

Model:	T410009G	T412009A
Capacity:	10 TON	12 TON
Min. Height (mm)	720	805
Max. Height (mm)	1190	1213
N.W. / G.W. (kgs)	23.5 / 26.38	29.3 / 30.8
Package Size(mm)	450x450x800	480x480x800
QTY/20'CY (PCS)	155	128

Jack Stand

T47000G
7 Ton

TRF4207
2 Ton

TRF4607
6 Ton

Model	T47000G	TRF4207	TRF4607
Capacity	7 TON	2 TON	6 TON
Min. Height (mm)	245	310	570
Max. Height (mm)	390	505	900
N.W. / G.W. (kg)	13.6 / 14.8	11 / 12	18 / 22
Package Size (mm)	355x245x265	280x280x420	435x415x705
QTY / 20'CY (PCS)	1112	680	180

Welding Jack Stand

TRF30301-1
3 Ton

TRF30502-1
5 Ton

TRF31002-1
10 Ton

TRF31502-1
15 Ton

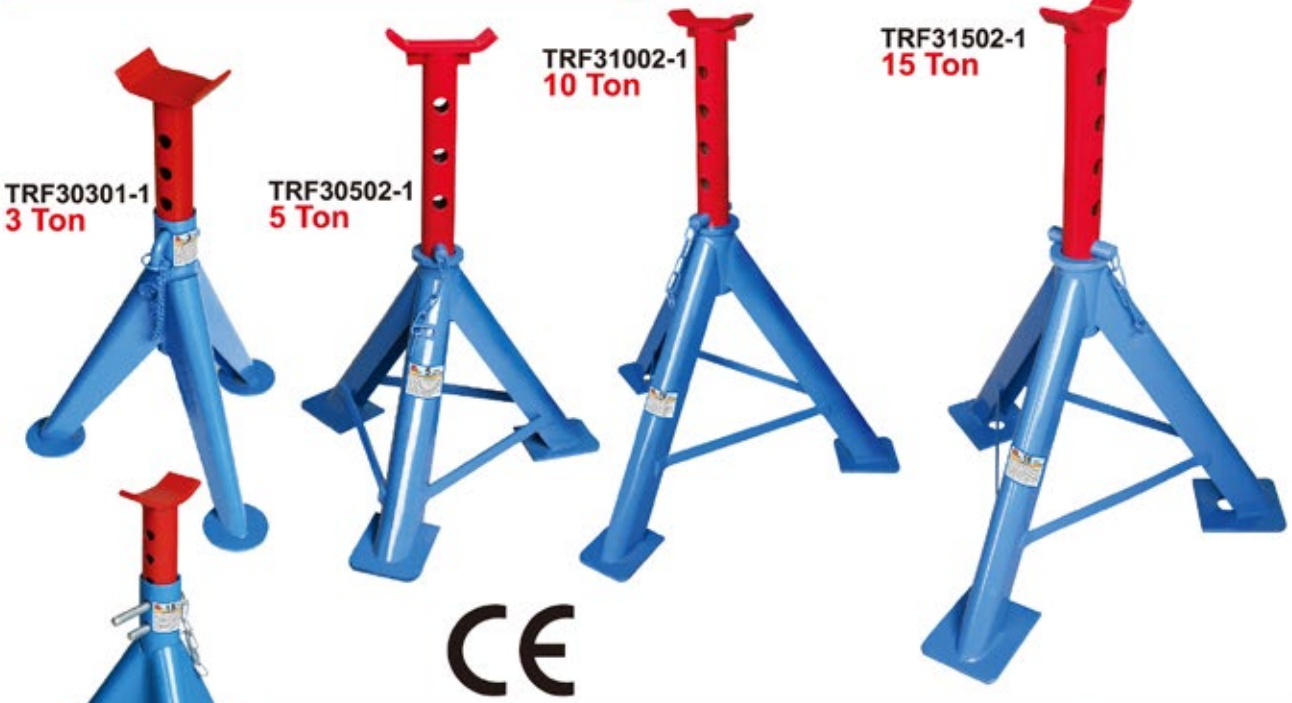

TRF30151-1
1.5 Ton

Model	Capacity	Min. Height (mm)	Max. Height (mm)	N.W. / G.W. (Piece) (kg)	Package Size (mm)	QTY/CTN (PCS)	QTY/20'CY (PCS)
TRF30151-1	1.5 Ton	300	425	2 / 2.5	830x520x300	6	1200
TRF30301-1	3 Ton	345	525	4.2 / 4.5	950x720x380	6	600
TRF30502-1	5 Ton	390	660	9 / 12	570x570x580	1	300
TRF31002-1	10 Ton	615	975	22.5 / 25.5	850x850x680	1	200
TRF31502-1	15 Ton	615	975	28.4 / 29	870x870x680	1	200

Heavy-Duty Vehicle Support Stand

PROFESSIONAL CE

TZ100001
10 Ton
(Short)

TZ100002
10 Ton
(Tall)

TZ150001
15 Ton
(Short)

TZ150002
15 Ton
(Tall)

Reinforced high stand with adjustment control pin

Model	TZ100001	TZ100002
Carrying Capacity	10 Ton	10 Ton
Min. Height (mm)	450	650
Max. Height (mm)	750	1100
N.W. / G.W. (kg)	19.5 / 21.5	24.5 / 26.5
Package Size (mm)	395x390x690	395x390x690
QTY / 20'CY (PCS)	280	210

Model	TZ150001	TZ150002
Carrying Capacity	15 Ton	15 Ton
Min. Height (mm)	450	650
Max. Height (mm)	750	1100
N.W. / G.W. (kg)	22.5 / 24.5	30 / 32
Package Size (mm)	395x390x490	395x390x725
QTY / 20'CY (PCS)	280	210

TZ200011
20 Ton
(Short)

TZ200012
20 Ton
(Tall)

TZ250001
25 Ton
(Short)

TZ250002
25 Ton
(Tall)

TZ200011 Screw ***low*** stand fitted with thrust bearing.

TZ200012 Screw ***high*** stand fitted with thrust bearing.

Model	TZ200011	TZ200012
Carrying Capacity	20 Ton	20 Ton
Min. Height (mm)	420	665
Max. Height (mm)	680	1170
N.W. / G.W. (kg)	27 / 29	37.5 / 39.5
Package Size (mm)	395x390x510	395x390x725
QTY / 20'CY (PCS)	280	210

TZ250001 Reinforced low stand with control pins and precision machined oil dipped sliding shaft.

TZ250002 Reinforced high stand with control pins and precision machined oil dipped sliding shaft.

Model	TZ250001	TZ250002
Carrying Capacity	25 Ton	25 Ton
Min. Height (mm)	415	675
Max. Height (mm)	640	1050
N.W. / G.W. (kg)	23.5 / 25.5	33.5 / 35.5
Package Size (mm)	395x390x455	395x390x725
QTY / 20'CY (PCS)	350	210

Underhoist Stand

Model	Capacity	Min. Height (mm)	Max. Height (mm)	N.W. / G.W. (kg)	Package Size (mm)	QTY/20'CY (PCS)
TRF42008	2 Ton	1730	1950	16 / 17.5	1600x190x120	780
TRF42009	2 Ton	1240	2145	17.5 / 18.5	1180x198x55	840
TRF40753	0.75 Ton	1360	2030	14.3 / 17.8	1410x370x65	580
TRF40753A	0.75 Ton	1360	2030	15.3 / 18.8	1410x370x65	580

Heavy-Duty Vehicle Support Stand

This product works great with a variety of vehicles because it features adjustable height and three different contact adapters. This jack stand also features three spring loaded swivel casters, making it easy to move but stable when weight is applied on top.

Saddle Type	Description
U1	120mm Square Head
U2	92mm Square Head
V	V Head Handles Up to φ 152mm

Model	TRF30703	TRF31203
Capacity	7 Ton	12 Ton
Min. Height (mm)	1295	1295
Max. Height (mm)	1905	1905
Base Diameter (mm)	711	711
N.W. / G.W. (kg)	65 / 68	78 / 81
Package Size (mm)	1130x370x320	1120x450x390
QTY / 20'CY (PCS)	200	140

www.tongrunjacks.com

Engine Stand

T23401
750 LBS

T24541
1000 LBS
CE

T25671
1250 LBS
CE

Foldable

T26801
1500 LBS
CE

Model:	T23401	T24541
Capacity:	750 LBS	1000 LBS
Product Size	890x780x850 mm	925x780x850 mm
N.W.	18.5 kgs	21 kgs
G.W.:	19.6 kgs	22.3 kgs
Package Size:	880x200x195 mm	880x200x195 mm
QTY/20'CY:	740 PCS	740 PCS

Model:	T25671	T26801
Capacity:	1250 LBS	1500 LBS
Product Size	995x705x960 mm	870x820x860 mm
N.W.	27.5 kgs	33.5 kgs
G.W.:	29 kgs	35.3 kgs
Package Size:	900x230x200 mm	860x420x165 mm
QTY/20'CY:	570 PCS	448 PCS

www.tongrunjacks.com

Engine Stand

T29001
2000 LBS

Model:	T29001
Capacity:	2000 LBS
Product Size	988x615x794 mm
N.W.	42 kgs
G.W.:	44.5 kgs
Package Size:	660x660x165 mm
QTY/20'CY:	336 PCS

TR8533
2000 LBS

NEW PRODUCT

Model:	TR8533
Capacity:	2000 LBS
Height:	1050 mm
N.W.	54 kgs
G.W.:	57 kgs
Package Size:	1# 1200x860x70 mm 2# 1130x270x230 mm
QTY/20'CY:	300 PCS
MOQ:	50 PCS

TR5605
2000 LBS

Model:	TR5605
Capacity:	2000 LBS
Height:	810 mm
N.W.	38 kgs
G.W.:	40 kgs
Package Size:	920x420x150 mm
QTY/20'CY:	360 PCS
MOQ:	50 PCS

Engine Leveler

TRF20501
500 KGS

TRF2750
680 KGS

Ball Bearing

TRF2750A
680 KGS

TRF22001
2000 KGS

Model	TRF20501	TRF2750	TRF2750A	TRF22001
Capacity	500 kgs	680 kgs	680 kgs	2000 kgs
N.W. / G.W.	4.5 kgs / 4.8 kgs	5.5 kgs / 6 kgs	6 kgs / 6.5 kgs	5.4 kgs / 6 kgs
Package Size	700x260x370mm	480x280x220mm	480x280x220mm	600x290x270mm
QTY/CTN	4 PCS	4 PCS	4 PCS	4 PCS
QTY/20'CY	1950 PCS	2750 PCS	2750 PCS	2680 PCS

Long Ram Jack

NEW PRODUCT

TH30306 3 TON
TH30506 5 TON
TH30506X 5 TON

Welded

Double Pump

Quick Lifting with Dual Pistons

T30308 3 TON
T30508 5 TON
T30808 8 TON

Model	Capacity	Min. Height (mm)	Max. Height (mm)	N.W. / G.W. (kg)	Package Size (mm)	QTY/20'CY (PCS)
TH30306	3 Ton	590	1085	11.38 / 11.88	610x160x130	1590
TH30506	5 Ton	590	1085	11.68 / 12.18	610x160x130	1590
TH30506X	5 Ton	560	1010	10.9 / 11.4	581x160x130	1690
T30308	3 Ton	630	1115	11.4 / 11.9	705x280x150	1378
T30508	5 Ton	635	1120	14.97 / 15.58	720x330x170	1100
T30808	8 Ton	635	1120	14.97 / 15.58	745x370x155	1048

Engine Crane

Foldable

T31002
1 TON

Model:	T31002
Capacity:	1 TON
Lifting Range:	25~2250 mm (1"~88-9/16")
Length:	1495 mm (58-7/8")
Width:	1180 mm (46-7/16")
Height:	1475 mm (58-1/16")
Package Size:	1580x395x210 mm
N.W.	69.5 kgs
G.W.	73 kgs
QTY/20'CY	187 PCS

Foldable

T31002X
1 TON

T31002X-GS
1 TON

Model:	T31002X	T31002X-GS
Capacity:	1 TON	1 TON
Lifting Range:	25~2040 mm (1"~80-5/16")	25~2040 mm (1"~80-5/16")
Length:	1510 mm (59-7/16")	1510 mm (59-7/16")
Width:	1015 mm (39-15/16")	1015 mm (39-15/16")
Height:	1545 mm (60-13/16")	1545 mm (60-13/16")
Package Size:	1450x465x190 mm	1450x465x190 mm
N.W.	65 kgs	65 kgs
G.W.	69.8 kgs	69.8 kgs
QTY/20'CY	234 PCS	234 PCS

Engine Crane

T32002
2 TON
CE

T32002-GS
2 TON
TÜV GS CE

T32002Q
2 TON
CE

Quick Lift with
Dual Pistons

Foldable

T32002X
2 TON

Model:	T32002	T32002-GS	T32002Q	T32002X
Capacity:	2 TON	2 TON	2 TON	2 TON
Lifting Range:	25~2445 mm	25~2445 mm	25~2445 mm	25~2240 mm
Length:	1740 mm	1740 mm	1740 mm	1615 mm
Width:	1040 mm	1040 mm	1040 mm	1010 mm
Height:	1550 mm	1580 mm	1580 mm	1480 mm
Package Size:	1# 890x600x100 mm	1# 890x600x100 mm	1# 890x600x100 mm	1# 780x550x100 mm
	2# 1550x330x180 mm	2# 1550x330x180 mm	2# 1550x330x180 mm	2# 1480x330x180 mm
N.W. / G.W.	1# 27.5 kgs / 29 kgs	1# 27.5 kgs / 29 kgs	1# 27.1 kgs / 28.5 kgs	1# 20.9 kgs / 22.36 kgs
	2# 73.78 kgs / 75.92 kgs	2# 73.78 kgs / 75.92 kgs	2# 73.5 kgs / 75.6 kgs	2# 60 kgs / 63.2 kgs
QTY/20'CY	140 PCS	140 PCS	140 PCS	177 PCS

Low Profile Engine Crane

PROFESSIONAL

T31002CE
1 TON
CE
Patent No.:
ZL201230031777.6

Low Profile
80mm

Foldable

T32002CE
2 TON
CE
Patent No.:
ZL201620207956.3

Low Profile
100mm

Rotating Handle 180°

Nylon Wheel

Model:	T31002CE	T32002CE
Capacity:	1 TON	2 TON
Min. Lifting	25 mm	25 mm
Max. Lifting	2100 mm	2420 mm
Product Size:	1480x1435x1020 mm	1615x1070x1540 mm
Package Size:	1470x390x185 mm	1# 600x510x155 mm
		2# 1470x390x185 mm
N.W. / G.W.	79 kgs / 81.3 kgs	1# 30.45 kgs / 31.67 kgs
		2# 67.77 kgs / 69.89 kgs
QTY/20'CY	230 PCS	165 PCS

Engine Crane

Foldable

TR30502B
0.5 TON
TR31002B
1 TON
TR32002B
2 TON
CE

Heavy Duty

Model:	TR30503B	TR31003B
Capacity:	0.5 TON	1 TON
Min.Height:	617 mm	617 mm
Max. Height:	2500 mm	2500 mm
N.W.	261 kgs	262.5 kgs
G.W.	281.5 kgs	283 kgs
Package Size:	1390x985x640 mm	1390x985x640 mm
QTY/20'CY:	80 PCS	80 PCS
MOQ:	3 PCS	3 PCS

TR30503B
0.5 TON
TR31003B
1 TON

Model:	TR30502B	TR31002B	TR32002B
Capacity:	0.5 TON	1 TON	2 TON
Min.Height:	320 mm	270 mm	310 mm
Max. Height:	2140 mm	2410 mm	2570 mm
N.W.	219 kgs	352.5 kgs	460.5 kgs
G.W.	242.5 kgs	367 kgs	540 kgs
Package Size:	1475x500x970 mm	1660x540x1240 mm	1900x630x1470 m
QTY/20'CY:	84 PCS	65 PCS	36 PCS
MOQ:	3 PCS	3 PCS	3 PCS

www.tongrunjacks.com

Engine Support

Model:	TRW03001
Capacity:	0.3 Ton
N.W.	16 kgs
G.W.:	18 kgs
Package Size:	1050x220x80 mm
Cross beam Length:	980 mm
QTY/20'CY:	972 PCS

TRW03001
0.3 TON

TW05001
0.5 TON

CE

Handle uses a manual threaded rod and features a double grooved chain

Enging Support Bar
Two Directions Enging Support

NEW PRODUCT

TW05002
0.5 TON

CE

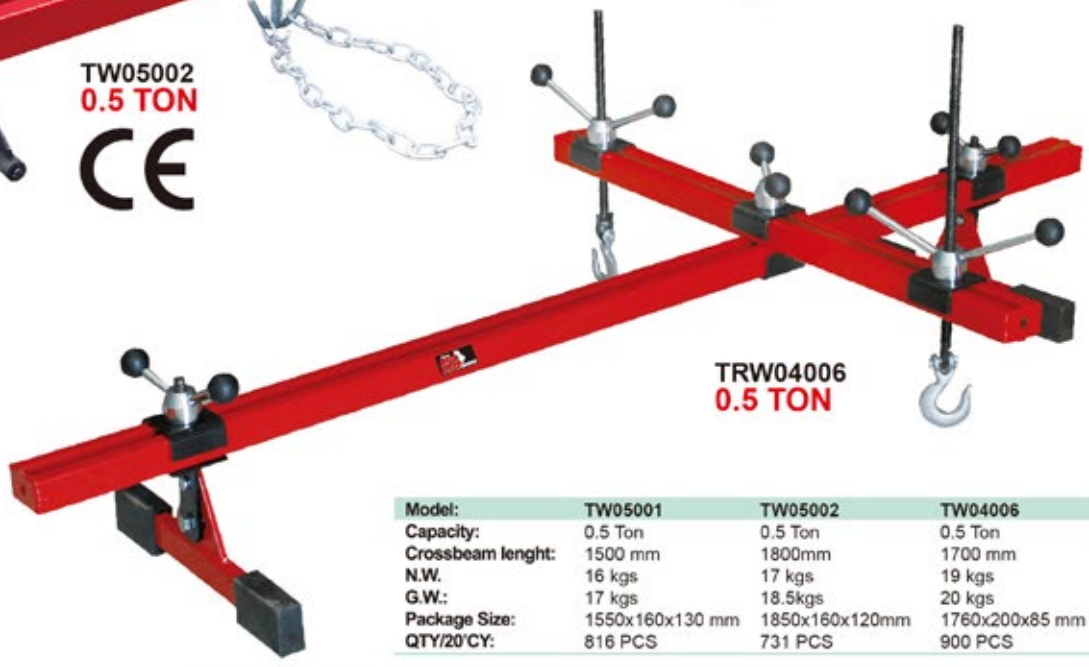

TRW04006
0.5 TON

Model:	TW05001	TW05002	TW04006
Capacity:	0.5 Ton	0.5 Ton	0.5 Ton
Crossbeam lenght:	1500 mm	1800mm	1700 mm
N.W.	16 kgs	17 kgs	19 kgs
G.W.:	17 kgs	18.5kgs	20 kgs
Package Size:	1550x160x130 mm	1850x160x120mm	1760x200x85 mm
QTY/20'CY:	816 PCS	731 PCS	900 PCS

www.tongrunjacks.com

Hydraulic Shop Press

TY06001
6 TON

TY12010
12 TON

Model:	TY06001
Capacity:	6 TON
Stroke:	127 mm
Work Range:	330x400x865 mm
N.W.	22.5 kgs
G.W.	24 kgs
Package Size:	730x280x135 mm
QTY/20'CY	700 PCS

Model:	TY12010
Capacity:	12 TON
Stroke:	160 mm
Work Range:	530x500x875 mm
N.W.	38.9 kgs
G.W.	41 kgs
Package Size:	1250x230x170 mm
QTY/20'CY	409 PCS

Model:	TRD53001
Capacity:	30 TON
Stroke:	150 mm
Work Range:	0~800 mm
N.W.	122 kgs
G.W.	132 kgs
Package Size:	1690x355x265mm
QTY/20'CY	150 PCS

TY12003
12 TON
CE

TY20011
20 TON
CE
Economic type

TRD53001
30 TON

NEW PRODUCT

Model:	TY12003	TY20011
Capacity:	12 TON	20 TON
Stroke:	175 mm	150 mm
Work Range:	0~610 mm	0~710 mm
N.W.	41 kgs	68.3 kgs
G.W.	43 kgs	71.8 kgs
Package Size:	1270x230x185 mm	1540x215x230 mm
QTY/20'CY	390 PCS	233 PCS

Complies with ASME Safety Standards

www.tongrunjacks.com

Hydraulic Shop Press

TY10003
10 TON

Complies with ASME Safety Standards

TY12001
12 TON

Model:	TY10003
Capacity:	10 TON
Stroke:	175 mm
Product Size:	680x450x1070 mm
N.W.	45.2 kgs
G.W.	48 kgs
Package Size:	775x550x180 mm
QTY/20'CY	350 PCS

Model:	TY12001
Capacity:	12 TON
Stroke:	175 mm
Product Size:	500x790x1060 mm
N.W.	56.5 kgs
G.W.	58.5 kgs
Package Size:	795x420x180 mm
QTY/20'CY	287 PCS

TY12002
12 TON

TY20001
20 TON

TY20005
20 TON

Model:	TY12002	TY20001	TY20005
Capacity:	12 TON	20 TON	20 TON
Stroke:	175 mm	185 mm	185 mm
Work Range:	0~920 mm	0~910 mm	0~910 mm
N.W.	1# 54.5 kgs / 2# 14 kgs	1# 36 kgs / 2# 60.8 kgs	1# 61.5 kgs / 2# 38.5 kgs
G.W.	1# 56.5 kgs / 2# 15 kgs	1# 37 kgs / 2# 61.8 kgs	1# 63.5 kgs / 2# 39.5 kgs
Package Size:	1# 1390x175x215 mm	1# 1565x185x145 mm	1# 1565x185x145 mm
	2# 675x230x170 mm	2# 795x330x150 mm	2# 795x330x170 mm
QTY/20'CY	234 PCS	170 PCS	163 PCS

Complies with ASME Safety Standards

Hydraulic Shop Press

PNEUMATIC

Complies with ASME Safety Standards

Model:	TY40001	TY40002	TY45001	TY50001
Capacity:	40 TON	40 TON	45 TON	50 TON
Stroke:	175 mm	175 mm	175 mm	175 mm
Work Range:	125~1080 mm	0~890 mm	0~865 mm	0~890 mm
N.W.	243 kgs	236.5 kgs	223 kgs	254 kgs
G.W.	278.4 kgs	274.5 kgs	257 kgs	285 kgs
Package Size:	2010x550x330 mm	920x380x1792 mm	1055x440x1870 mm	920x380x1792 mm
QTY/20'CY	60 PCS	36 PCS	27 PCS	36 PCS

www.tongrunjacks.com

Hydraulic Shop Press

Complies with ASME Safety Standards

Model:	TY30001
Capacity:	30 TON
Stroke:	160 mm
Work Range:	0~840 mm
N.W.	156 kgs
G.W.	166.5 kgs
Package Size:	1620x380x310 mm
QTY/20'CY	100 PCS

Model:	TY20002
Capacity:	20 TON
Stroke:	185 mm
Work Range:	0~910 mm
N.W.	1# 37.5 kgs / 2# 60.8 kgs
G.W.	1# 38.5 kgs / 2# 61.8 kgs
Package Size:	1# 1565x185x145 mm 2# 795x330x150 mm
QTY/20'CY	170 PCS

Application:
Hydraulic Shop Press are designed for automotive, truck, implement, fleet, and imdustrial repair shops where pressing, bending, straightening, forming, holding required.

TY30005
30 TON
CE
PNEUMATIC

Model:	TY30005	TY30002
Capacity:	30 TON	30 TON
Stroke	160 mm	160 mm
Work Range:	0~280 mm	0~840 mm
N.W.	149 kgs	158 kgs
G.W.	174 kgs	168 kgs
Package Size:	1050x750x410 mm	1620x380x310 mm
QTY/20'CY	75 PCS	100 PCS

Hydraulic Shop Press

Special Quality Design

Polished and treated cylinder rams use high performance seals

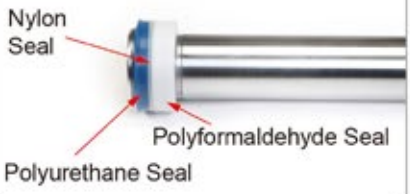

Polished inner cylinder walls extend the life of the seals to minimize abrasion and wear

Polished and treated pump cylinder pistons use high performance seals

High Quality Air Pump

Polyformaldehyde Double Seal

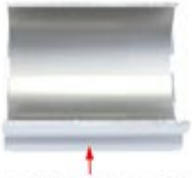

Fully polished inner aluminum cylinder wall

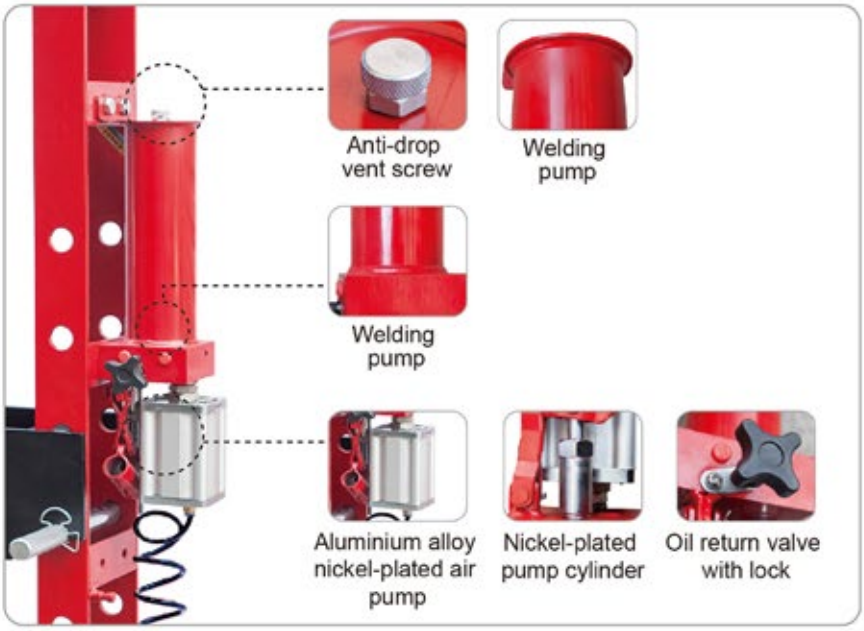

Option:

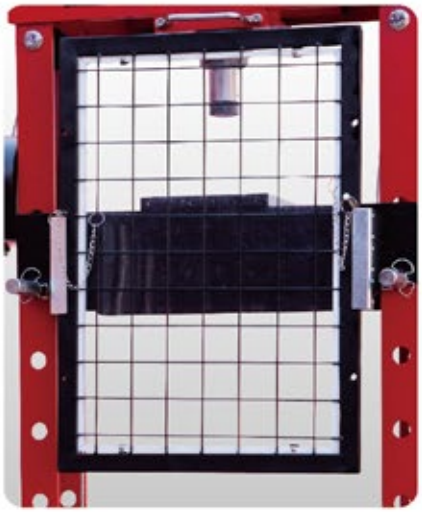

Protective mesh panel

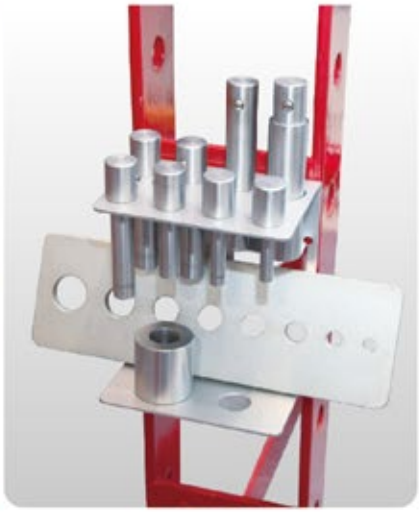

Adaptor

Application:
Hydraulic Shop Press are designed for automotive, truck, implement, fleet, and imdustrial repair shops where pressing, bending, straightening, forming, holding required.

PROFESSIONAL

Hydraulic Shop Press

PROFESSIONAL

Complies with ASME Safety Standards

Model:	TY20021
Capacity:	20 TON
Stroke:	190 mm
Work Range:	0~895 mm
N.W.	99 kgs
G.W.	126 kgs
Package Size:	1690x690x260 mm
QTY/20'CY	64 PCS

Model:	TY20022
Capacity:	20 TON
Stroke:	190 mm
Work Range:	0~895 mm
N.W.	101 kgs
G.W.	128 kgs
Package Size:	1690x690x260 mm
QTY/20'CY	64 PCS

PNEUMATIC

Model:	TY30022
Capacity:	30 TON
Stroke:	160 mm
Work Range:	0~940 mm
N.W.	122 kgs
G.W.	152 kgs
Package Size:	1690x690x260 mm
QTY/20'CY	64 PCS

Model:	TY30021
Capacity:	30 TON
Stroke:	160 mm
Work Range:	0~940 mm
N.W.	124 kgs
G.W.	154 kgs
Package Size:	1690x690x260 mm
QTY/20'CY	64 PCS

Hydraulic Shop Press

PROFESSIONAL

Complies with ASME Safety Standards

Patent No.:
ZL201010181945.X
ZL201220040182.1
ZL201220188858.1
ZL201120087955.7

PNEUMATIC

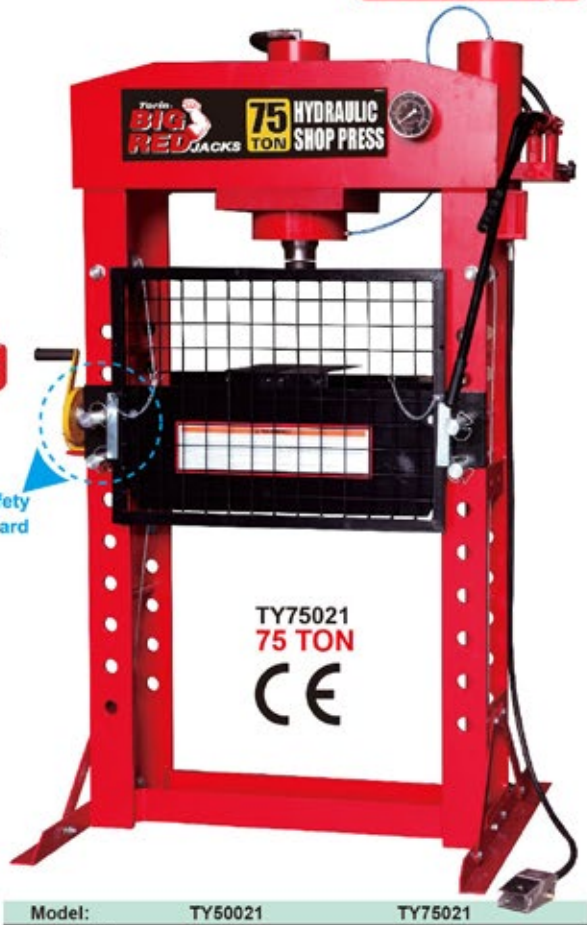

Model:	TY50021	TY75021
Capacity:	50 TON	75 TON
Stroke:	200 mm	240 mm
Work Range:	0~920 mm	0~900 mm
N.W.	293 kgs	460 kgs
G.W.	362 kgs	532 kgs
Package Size:	1130x850x2076 mm	1370x840x2124 mm
QTY/20'CY	12 PCS	10 PCS

CE

TRD510001
100 TON
TRD515001
150 TON
TRD520001
200 TON

Model:	TRD510001
Capacity:	100 TON
Stroke:	280 mm
Work Range:	0~950 mm
N.W.	900 kgs
G.W.	1050 kgs
Package Size:	1000x1880x520 mm
QTY/20'CY	12 PCS

Model:	TRD515001
Capacity:	150 TON
Stroke:	350 mm
Work Range:	0~950 mm
N.W.	1300 kgs
G.W.	1350 kgs
Package Size:	1470x2270x650 mm
QTY/20'CY	10 PCS

Model:	TRD520001
Capacity:	200 TON
Stroke:	350 mm
Work Range:	0~950 mm
N.W.	1750 kgs
G.W.	1800 kgs
Package Size:	1520x2200x520 mm
QTY/20'CY	7 PCS

www.tongrunjacks.com

Hydraulic Shop Press

PROFESSIONAL

Complies with ASME Safety Standards

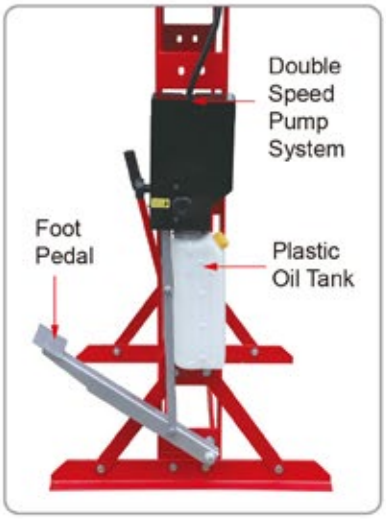

Patent No.:

ZL201010181945.X
ZL201110077532.1
ZL201220188858.1
ZL201110077547.8
ZL201120190042.8

Patent Design

Model:	TY20030	TY30030	TY50030
Capacity:	20 TON	30 TON	50 TON
Stroke:	190 mm	160 mm	200 mm
Work Range:	0~895 mm	0~940 mm	0~920 mm
N.W.	106 kgs	129 kgs	302 kgs
G.W.	133 kgs	159 kgs	371 kgs
Package Size:	1690X820X260mm	1690X820X260mm	1220x860x2115 mm
QTY/20'CY	56 PCS	56 PCS	10 PCS

www.tongrunjacks.com

Transmission Jack

TEL05001
0.5 TON
CE

TEL03004
0.3 TON
TEL05004
0.5 TON
CE

TEL03004S
0.3 TON
TEL05004S
0.5 TON
CE

TEL05006
0.5 TON
CE

Single Pump

Complies with ASME Safety Standards

Telescoping Cylinder Rams

TEL05005
0.5 TON
CE

Double Pump

Model	Capacity	Min. Height	Max. Height	N.W.	G.W.	Package Size	QTY/20'CY
TEL05001	0.5 Ton	1260 mm	1735 mm	33 kgs	35.5 kgs	685x430x190 mm	473 PCS
TEL03004	0.3 Ton	1135 mm	1950 mm	28 kgs	33 kgs	1135x310x300 mm	252 PCS
TEL05004	0.5 Ton	1135 mm	1950 mm	28 kgs	33 kgs	1135x310x300 mm	252 PCS
TEL03004S	0.3 Ton	1140 mm	1945 mm	24 kgs	28.5 kgs	1110x280x155 mm	600 PCS
TEL05004S	0.5 Ton	1140 mm	1945 mm	24 kgs	28.5 kgs	1110x280x155 mm	600 PCS
TEL05006	0.5 Ton	875 mm	1855 mm	76 kgs	85 kgs	580x330x865 mm	134 PCS
TEL05005	0.5 Ton	890 mm	1795 mm	57 kgs	65 kgs	530x320x750 mm	222 PCS

Transmission Jack

PNEUMATIC

TEL05002
0.5 TON
CE

Single Pump

Model:	TEL05002
Capacity:	0.5 TON
Min. Height (mm)	850
Max. Height (mm)	1815
N.W. / G.W. (kgs)	102.5 / 109
Package Size (mm)	565x385x880
QTY/20'CY	120

Model:	TEL10001
Capacity:	1 TON
Min. Height (mm)	880
Max. Height (mm)	1915
N.W. / G.W. (kgs)	81 / 90
Package Size (mm)	580x330x865
QTY/20'CY	134

Telescoping Cylinder Rams

TEL10001
1 TON
CE

Single Pump

Transmission Jack

TE05001
0.5 Ton
CE

TE10001
1 Ton
CE

Model:	TE05001	TE10001
Capacity:	0.5 TON	1 TON
Min. Height (mm)	215	210
Max. Height (mm)	590	780
N.W. / G.W. (kgs)	33.5 / 38.5	72 / 75
Package Size (mm)	815x470x260	965x530x240
QTY/20'CY	248	198

Model:	TRE15001
Capacity:	1.5 TON
Min. Height (mm)	270
Max. Height (mm)	900
N.W. / G.W. (kgs)	83 / 90
Package Size (mm)	990x560x310
QTY/20'CY	210

TRE15001
1.5 Ton

Transmission Jack

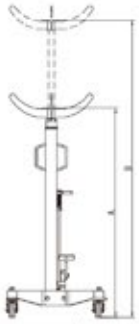

Model	TEL04011
Capacity	0.4 Ton
Min. Height (mm) (A)	1240
Max. Height (mm) (B)	2105
Clamp Saddle (mm) (C)	55
N.W. / G.W. (kg)	26 / 29
Package Size (mm)	1235x530x125
QTY / 20'CY (PCS)	324

Model	TEL06011
Capacity	0.6 Ton
Min. Height (mm) (A)	1135
Max. Height (mm) (B)	1980
Clamp Saddle (mm) (C)	75
N.W. / G.W. (kg)	34 / 37
Package Size (mm)	1145x340x250
QTY / 20'CY (PCS)	288

Optional Choose For Special Clamp Saddle

Model	TEL08011
Capacity	0.8 Ton
Min. Height (mm) (A)	850
Max. Height (mm) (B)	1840
Clamp Saddle (mm) (C)	75
N.W. / G.W. (kg)	46 / 49
Package Size (mm)	875x390x260
QTY / 20'CY (PCS)	304

Model	TEL15011
Capacity	1.5 Ton
Min. Height (mm) (A)	1130
Max. Height (mm) (B)	1915
Clamp Saddle (mm) (C)	75
N.W. / G.W. (kg)	55.5 / 59
Package Size (mm)	1175x320x260
QTY / 20'CY (PCS)	248

Patent No.:
ZL201210025173.X
ZL201220168382.5
ZL201110083123.2

TEL04011
0.4 Ton

TEL06011
0.6 Ton

CE

Telescoping Cylinder Rams

TEL08011
0.8 Ton

Nylon Wheel

TEL15011
1.5 Ton

Stronger Steel Base

www.tongrunjacks.com

2 Post Base Plate with Sub-frame Assembly

QJY230B-E
QJY240B-E

Electric Safety Lock

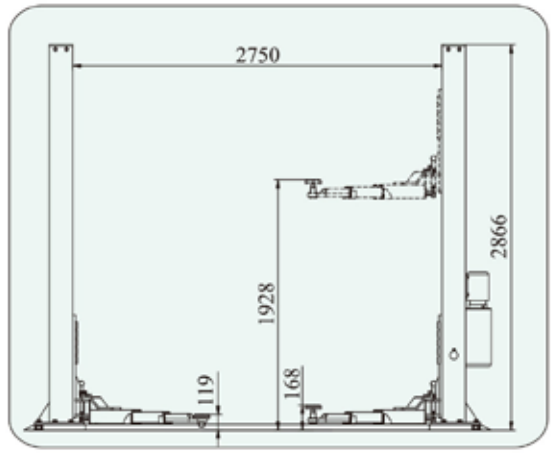

Sub-Frame Assembly

QJY230B-E,QJY240B-E

- Fully automatic electric control panel.
- Driven by dual hydraulic cylinders.
- Chain type lifting system.
- Internal Electric locking mechanism, w/two point safety latches in each column.
- Automatic safety arm locks.
- Easy to operate up and down switches on electrical control box.
- Steel wire rope equalizing cables.
- Multi-voltage power supply is available for electrical requirements.
- Optional motors available.
- Adjustable lift pads and adapters
- Wide base platform for extra support.
- Durable powder coat finish.

QJY230B
QJY240B

- Manual safety locking system.
- Driven by dual hydraulic cylinders.
- Mechanical locking system, w/single point safety latches in each column.
- Chain type lifting system.
- Steel wire rope equalizing cables.
- Multi-voltage power supply is available for electrical requirements.
- Optional motors.
- Adjustable lift pads and adapters.
- Low profile Floorplate.
- Durable powder coat finish.

Mechanical Safety Lock

Sub-Frame Assembly

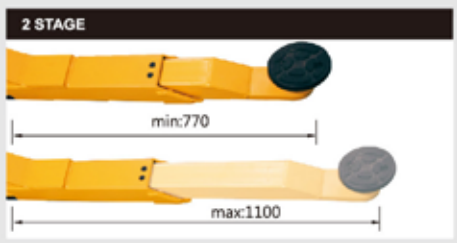

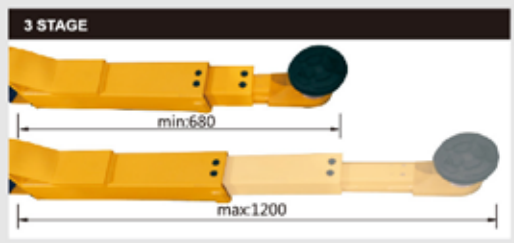

Model	Capacity	Moter performance	Electrical connection	Lifting time	Package size		N.W./G.W.	QTY/20'CY
QJY230B	3 t	2.2 kw	380V / 220V	50 sec.	1# 2855x470x720mm 2# 3200x555x45mm	3# 800x280x320mm	650/665 kgs	24 PCS
QJY230B-E	3 t	2.2 kw	380V / 220V	50 sec.	1# 2855x470x720mm 2# 3200x555x45mm	3# 800x280x320mm 4# 590x240x250mm	675/690 kgs	24 PCS
QJY240B	4 t	2.2 kw	380V / 220V	50 sec.	1# 2855x470x720mm 2# 3200x555x45mm	3#800x280x320mm	690/705 kgs	24 PCS
QJY240B-E	4 t	2.2 kw	380V / 220V	50 sec.	1# 2855x470x720mm 2# 3200x555x45mm	3# 800x280x320mm 4# 590x240x250mm	715/730 kgs	24 PCS

2 Post Base Plate

QJY230C-E 3t
QJY240C-E 4t

- Fully automatic electric control panel.
- Driven by dual hydraulic cylinders.
- Chain type lifting system.
- Internal Electric locking mechanism, w/two point safety latches in each column.
- Automatic safety arm locks.
- Easy to operate up and down switches on electrical control box.
- Steel wire rope equalizing cables.
- Multi-voltage power supply is available for electrical requirements.
- Optional motors available.
- Adjustable lift pads and adapters
- Wide base platform for extra support.
- Durable powder coat finish.

Electric Safety Lock

QJY230C-E 3t
QJY240C-E 4t

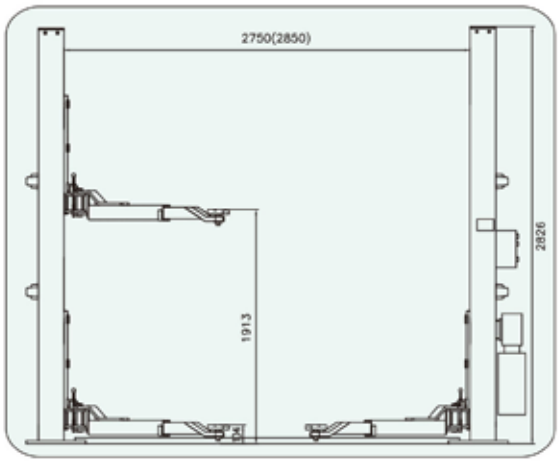

QJY230C 3t
QJY240C 4t

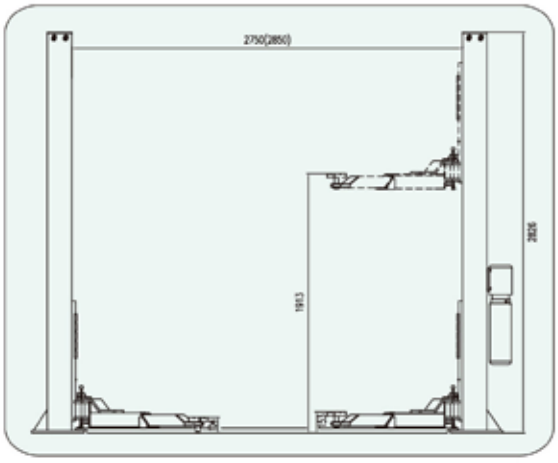

QJY230C 3t
QJY240C 4t

- Manual safety locking system.
- Driven by dual hydraulic cylinders.
- Mechanical locking system, w/single point safety latches in each column.
- Chain type lifting system.
- Steel wire rope equalizing cables.
- Multi-voltage power supply is available for electrical requirements.
- Optional motors.
- Adjustable lift pads and adapters.
- Low profile Floorplate.
- Durable powder coat finish.

Mechanical Safety Lock

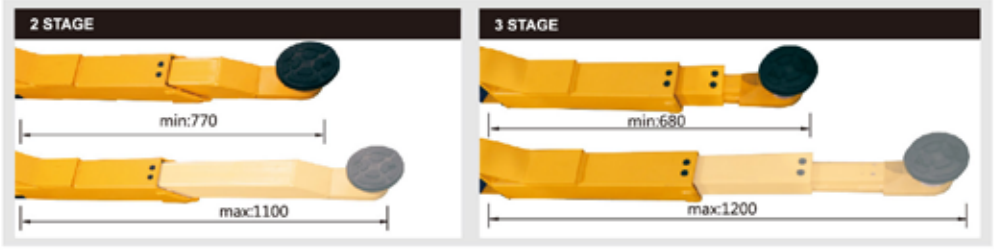

Model	Capacity	Moter performance	Electrical connection	Lifting time	Package size		N.W./G.W.	QTY/20'CY
QJY230C	3 t	2.2 kw	380V / 220V	50 sec.	1# 2840x470x720mm	2# 800x280x320mm	560/575 kgs	27 PCS
QJY230C-E	3 t	2.2 kw	380V / 220V	50 sec.	1# 2840x470x720mm	2# 800x280x320mm 3# 590x240x250mm	585/600 kgs	27 PCS
QJY240C	4 t	2.2 kw	380V / 220V	50 sec.	1# 2840x470x720mm	2# 800x280x320mm	600/615 kgs	27 PCS
QJY240C-E	4 t	2.2 kw	380V / 220V	50 sec.	1# 2840x470x720mm	2# 800x280x320mm 3# 590x240x250mm	625/640 kgs	27 PCS

2 Post Base Plate

QJY230CY 3t

- Manual safety locking system.
- Driven by dual hydraulic cylinders.
- Mechanical locking system, w/single point safety latches in each column.
- Chain type lifting system.
- Steel wire rope equalizing cables.
- Multi-voltage power supply is available for electrical requirements.
- Optional motors.
- Adjustable lift pads and adapters.
- Low profile Floorplate.
- Durable powder coat finish.

Electric Safety Lock

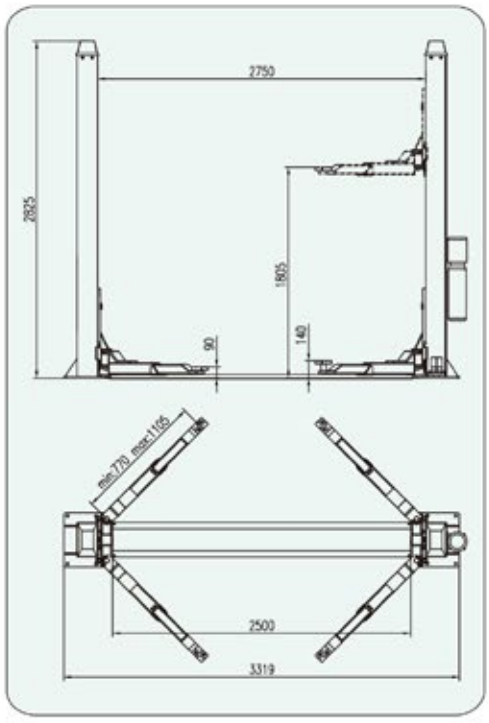

Model	Capacity	Moter performance	Electrical connection	Lifting time	Package size		N.W./G.W.	QTY/20'CY
QJY230CY	3.5 t	2.2 kw	380V / 220V	50 sec.	1# 2470x470x720mm	2# 800x280x320mm	515/530 kgs	27 PCS

2 Post Overhead Clearfloor 2 Piece Column

CE

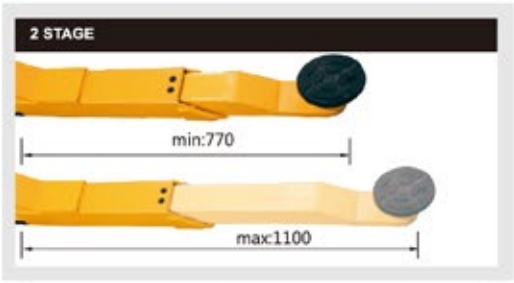

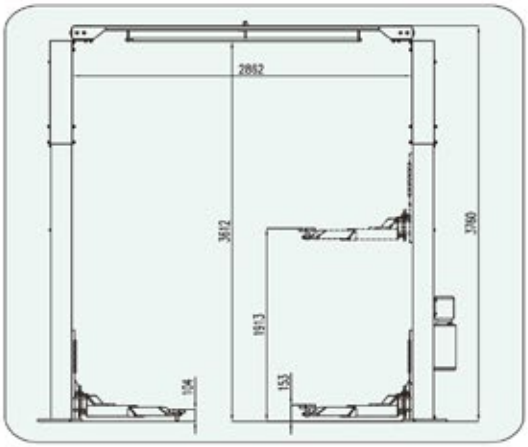

Model	Capacity	Moter performance	Electrical connection	Lifting time	Package size		N.W./G.W.	QTY/20'CY
QJY230DL	3 t	2.2 kw	380V / 220V	50 sec.	1# 2840x470x720mm 2# 980x355x190mm	3# 2866x172x134mm 4# 800x280x320mm	610/625 kgs	21 PCS

2 Post Overhead Clearfloor

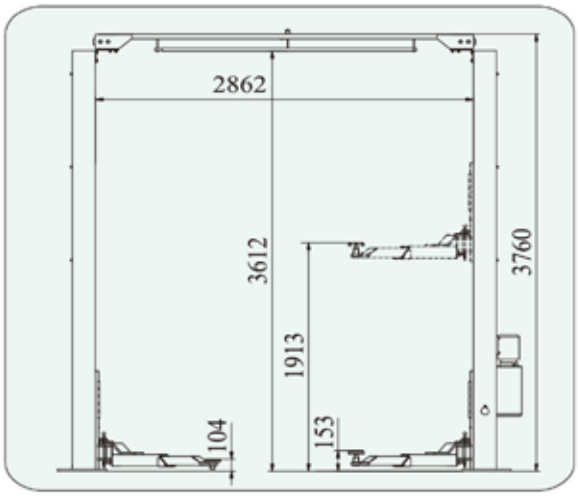

QJY230D-E, QJY240D-E

- Fully automatic electric control panel.
- Driven by dual hydraulic cylinders.
- Chain type lifting system.
- Internal Electric locking mechanism, w/two point safety latches in each column.
- Automatic safety arm locks.
- Easy to operate up and down switches on electrical control box.
- Steel wire rope equalizing cables.
- Multi-voltage power supply is available for electrical requirements.
- Optional motors available.
- Adjustable lift pads and adapters
- Durable powder coat finish.
- No Floorplate restrictions.
- Overhead crossover beam.

- Manual safety locking system.
- Driven by dual hydraulic cylinders.
- Mechanical locking system, w/single point safety latches in each column.
- Chain type lifting system.
- Steel wire rope equalizing cables.
- Multi-voltage power supply is available for electrical requirements.
- Optional motors.
- Adjustable lift pads and adapters.
- No Floorplate restrictions.
- Overhead crossover beam.
- Durable powder coat finish.

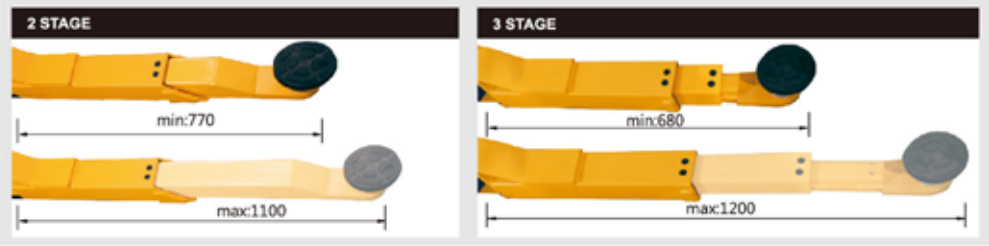

Model	Capacity	Moter performance	Electrical connection	Lifting time	Package size		N.W./G.W.	QTY/20'CY
QJY230D	3 t	2.2 kw	380V / 220V	50 sec.	1# 3650x470x720mm	2# 800x280x320mm	610/625 kgs	15 PCS
QJY230D-E	3 t	2.2 kw	380V / 220V	50 sec.	1# 3650x470x720mm	2# 800x280x320mm 3# 590x240x250mm	635/650 kgs	15 PCS
QJY240D	4 t	2.2 kw	380V / 220V	50 sec.	1# 3650x470x720mm	2# 800x280x320mm	660/675 kgs	15 PCS
QJY240D-E	4 t	2.2 kw	380V / 220V	50 sec.	1# 3650x470x720mm	2# 800x280x320mm 3# 590x240x250mm	685/700 kgs	15 PCS

2 Post Overhead Clearfloor

The ALI CERTIFIED TCE 10,000-lb. Overhead Commercial Lift is the newest and best solution that provides ample door opening clearance for entry to vehicles. Each lift is designed using a single piece column, a variable overhead cross-member, and extra tall carriages that all combine to create a very strong and reliable lift design.

Registered by TORIN Inc.
Designed in USA, Made in China

Optional Overhead 14' Height Extender Kit Shown Is Not Included With Standard Lift

Dual Arm Configuration

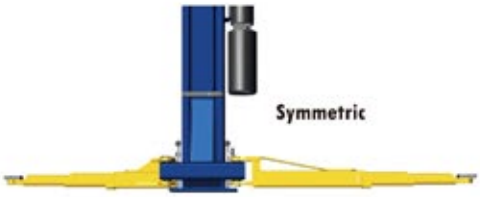

Compact Three-Stage Front and Rear Arm Designs

Model # T10000-20H-33

FEATURES AND BENEFITS

10,000-lb. Lift capacity	• Lock Mechanism	- Manual
• Single point lock release	• Motor Phase(s)	- 1 Phase
• Dual direct drive hydraulic cylinders	• Volts	- 208-240
• Oversized 57" tall lifting carriages	• Hertz	- 60
• Automatic arm restraints	• Amps	- 25 Amps (4.4 kw)
• Truck adapter kit	• Time to Full Rise (seconds)	- 60
• Triple telescoping arm design	• Maximum operating hydraulic pressure developed upon lifting the rated capacity Manufacturer	- 2450 psi / 168.92 bar
• Steel aircraft quality equalizing cables		
• Matted powder coat finish		
• Max rise height with adapters 78-in. (1981mm)	• Warranty	- 2 Years
• Three optional variable drive through clearances		

Specifications	US Imperial (in) (lbs)	Metric (mm) (kg)
Lift Capacity	- 10,000-lbs.	4,545-kg
Max Rise from the ground	- 72.75	1848mm
Lifting Range	- 68.70	1745mm
Lowest Clearance from the ground	- 4.05	103mm
Narrow Drive-Thru Clearance	- 88.15	2239mm
Medium Drive-Thru Clearance	- 94.06	2389mm
Wide Drive-Thru Clearance	- 99.96	2539mm
Standard Overall Height	- 143.7in 11.97ft	3650mm
Tall Overall Optional Height – NOT INCLUDED	- 166in 13.89ft	4235mm
Max Load Per Arm	- 2500-lbs.	1136-kg

Shipping Dimensions	US Imperial (in)	Metric (mm) (kg)
Lift Structure Weight	- 1893.26-lbs	860-kg
Shipping Dimensions L x W x H	141.9 x 22.4 x 37.6	3605 x 570 x 955 mm
Power Unit Weight	- 60-lbs	27.2-kg
Shipping Dimensions L x W x H	35.43 x 11 x 12.60	900 x 280 x 320mm
24" Height Extender Weight	- 167.55-lbs	76.2-kg
Shipping Dimensions L x W x H	30.3 x 17.3 x 16.9	770 x 440 x 430mm
Container QTY	- QTY/20' CY - NA	QTY/40' CY - 22

www.tongrunjacks.com

Clearfloor Two Post Lift

CE

QJY245DS

- Manual safety locking system.
- Driven by dual hydraulic cylinders.
- Lifting Carriages are raised by direct hydraulic force.
- Mechanical locking system, w/single point safety latches in each column.
- Steel wire rope equalizing cables.
- Multi-voltage power supply is available for electrical requirements.
- Optional motors.
- Fixed lift pads and adapters.
- No Floorplate restrictions.
- Overhead crossover beam.
- Durable powder coat finish.

Mechanical Safety Lock

Asymmetric

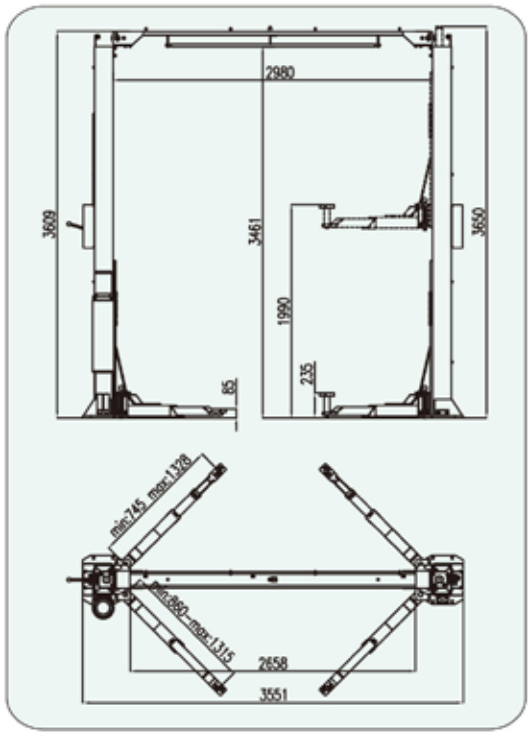

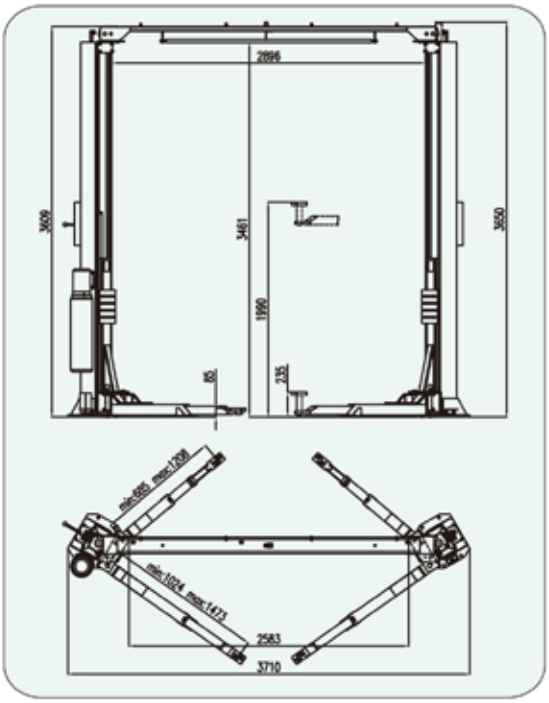

QJY245DA

- Manual safety locking system.
- Driven by dual hydraulic cylinders.
- Lifting Carriages are raised by direct hydraulic force.
- Mechanical locking system, w/single point safety latches in each column.
- Steel wire rope equalizing cables.
- Multi-voltage power supply is available for electrical requirements.
- Optional motors.
- Fixed lift pads and adapters.
- No Floorplate restrictions.
- Overhead crossover beam.
- Durable powder coat finish.

Mechanical Safety Lock

Asymmetric

Model	Capacity	Moter performance	Electrical connection	Lifting time	Package size		N.W./G.W.	QTY/20'CY
QJY245DA	4.5 t	2.2 kw	380V / 220V	60 sec.	1# 3580x500x880mm	2# 900x280x320mm	765/790 kgs	8 PCS
QJY245DS	4.5 t	2.2 kw	380V / 220V	60 sec.	1# 3580x500x880mm	2# 900x280x320mm	760/785 kgs	8 PCS

Four Post Lift

REPLACE WORDING:
- Ladder lock system
- Commercial grade synchronizing safety latch system offers a unique two position locking mechanism
- Air locking system
- Detachable tilting approach ramp
- Large heavy-duty 3" cylinder
- Aircraft quality lifting cables
- Matted powder coat finish

QJY4030
QJY4030H
QJY4040
QJY4040H

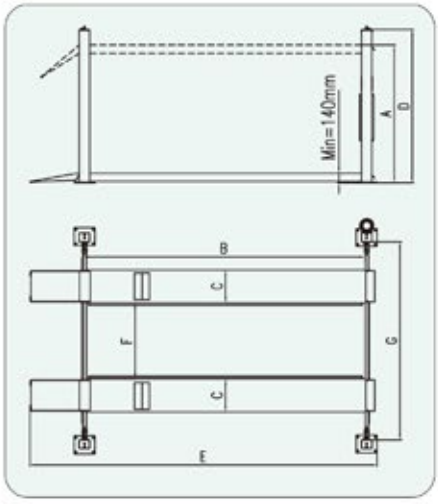

Optional:

Optional:

Model	Capacity	A. Max ground clearance	B. Table length	C. Table width	D. Overall height	E. Overall width	F. Clearance between tabels	G. Clearance between columns	Rise time	Drop time	Power of moter	Power of supply	Package size	N.W/G.W	QTY/20'CY
QJY4030	3t	1900mm	4216mm	480mm	2230mm	5204mm	962mm	2337mm	60 sec	45 sec	2.2 kw	380V/220V	4376x530x710mm	705/725kg	12PCS
QJY4030H	3t	2265mm	5080mm	480mm	2580mm	6068mm	962mm	2337mm	60 sec	45 sec	2.2 kw	380V/220V	5240x530x710mm	815/835kg	12PCS
QJY4040	4t	1900mm	4175mm	480mm	2230mm	5110mm	1120mm	2715mm	60 sec	45 sec	2.2 kw	380V/220V	4339x530x710mm	780/800kg	12PCS
QJY4040H	4t	2265mm	5080mm	480mm	2580mm	6068mm	1120mm	2715mm	60 sec	45 sec	2.2 kw	380V/220V	5240x530x710mm	895/915kg	12PCS

QJY4040-ZJK

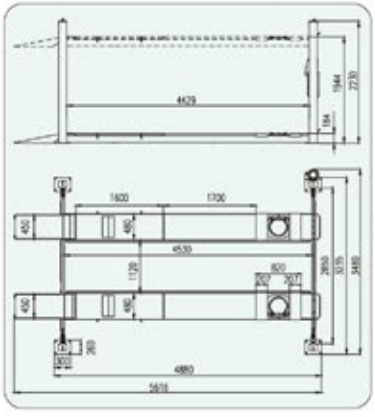

Optional:

Features:
- High strength silicon resin skid deck after treatment, the car can pass by more smoothly.
- Pneumatic unlock system, easy to operate.
- Driven by hydraulic cylinders, transmission by wire rope, low noise.
- Wire Rope fracture proof system, explosion proof devices of hydraulic system, more secure and reliable.
- Second lift Optional.

Model	Capacity	Min ground clearance	Max ground clearance	Rise time	Drop time	Power of moter	Power of supply	Tabel length	Tabel width	Package size	N.W./G.W.	QTY/20'CY
QJY4040-ZJK	4 t	184 mm	1944 mm	60 sec.	45 sec.	2.2 kw	380V / 220V	4650 mm	480 mm	1# 4650x560x878 mm 2# 900x280x320 mm	1040/1065 kgs	8 PCS

Four Post Lift

QJY4040-ZJYK

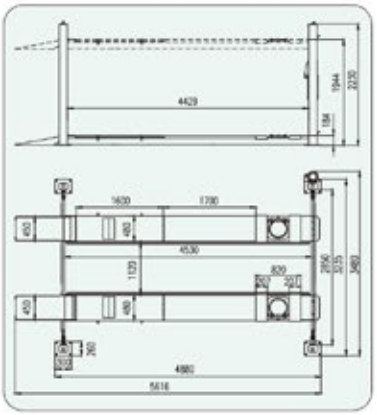

Features:

- High strength silicon resin skid deck after treatment, the car can pass by more smoothly.
- Pneumatic unlock system, easy to operate.
- Driven by hydraulic cylinders, transmission by wire rope, low noise.
- Wire Rope fracture proof system, explosion proof devices of hydraulic system, more secure and reliable.
- Second lift Optional.

Optional:

Model	Capacity	Min ground clearance	Max ground clearance	Rise time	Drop time	Power of moter	Power of supply	Tabel length	Tabel width	Package size	N.W./G.W.	QTY/20'CY
QJY4040-ZJYK	4 t	184 mm	1944 mm	60 sec.	45 sec.	2.2 kw	380V / 220V	4650 mm	480 mm	1# 4650x560x878 mm 2# 900x280x320 mm 3# 990x550x330 mm	1150/1190 kgs	8 PCS

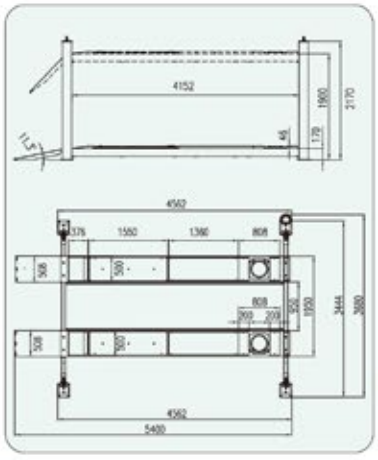

QJY4045-E

Optional:

QJYJ030
Rolling Bridag Jack
Height: 280~620 mm

QJY-ZJP

QJY4045-E-QMFJ

- Electric lock release system meets requirements of different customers and provides convenience when installing and operating the lift.
- Driven by single hydraulic cylinder, which is hidden under the runway for minimum exposure and maximum reliable performance.
- Adjustable inner distance between runways for vehicle with different width.
- Integrated rail for secondary lift provides maximum strength and reliability.
- Each lift is equipped with a secondary lock system to prevent sharp falling in case the unlikely event of cable failure or oil hose broken occur.

Model	Capacity	Min ground clearance	Max ground clearance	Rise time	Drop time	Power of moter	Power of supply	Tabel length	Tabel width	Package size	N.W./G.W.	QTY/20'CY
QJY4045-E	4.5 t	170 mm	1900 mm	60 sec.	20~40 sec.	2.2 kw	380V / 220V	4240 mm	500 mm	1# 4530x560x820 mm 2# 800x280x320 mm	1150/1190 kgs	8 PCS

Single Post Lift

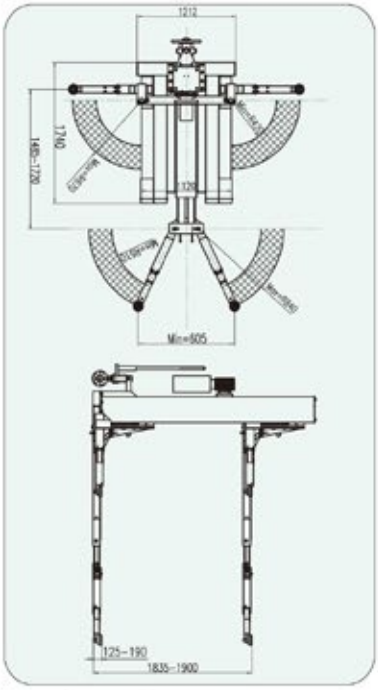

- Manual single side release system
- Single post design make service more convenient
- Moveable single post lift with adjustable arm length
- Rubber door protection effectively avoid unexpected injuries and damages
- Cover for post ensure good outlooking
- It has been proofed by dynamic test with 125% of rated capacity and static test with 150% of rated capacity
- CE certificate

QJY130

CE

Model	Lifting capacity	Overall dimension	Max lifting height	Low lifting height	Lifting/ Lowering time	Power supply	Motor power	Fuse protection	Weight	QTY/20'CY
QJY130	2800KG	1850mmX1450mmX2500mm	1835-1900mm	125-190mm	45/40 sek	220V/380V	2.2KW	16A	750KG	16PCS

Double Scissor In-ground Lift

QJYJ30-ZW
QJYJ30-E-ZW

- Ready to use directly out of the box
- Low profile extendable platform design, for a wide range of service
- Pneumatic looking system (QJYJ30-ZW)
  Electric looking system (QJYJ30-E-ZW)

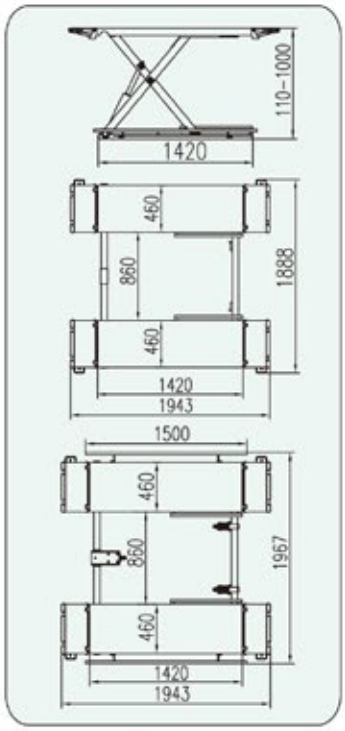

Model	Capacity	Min ground clearance	Max ground clearance	Rise time	Drop time	Power of moter	Power of supply	Tabel length	Tabel width	Package size	N.W./G.W.	QTY/20'CY
QJYJ30-ZW	3 t	110mm	1000mm	30 sec.	25 sec.	2.2 kw	380V / 220V	1420mm	460mm	1#1960x1950x190mm 2#640x520x1170mm	470/480 kgs	22 PCS
QJYJ30-E-ZW	3 t	110mm	1000mm	30 sec.	25 sec.	2.2 kw	380V / 220V	1420mm	460mm	1#1960x1950x190mm 2#640x520x1170mm	470/480 kgs	22 PCS

Low Profile Scissor Lift

QJYJ30X

- Minimize your shop space and increase working height with this lift.
- Lower profile and takes up limited space .
- Pneumatic self locking mechanisms.
- Quiet and smooth operation.
- Great for tire shops and oil changing stations that wants to increase speed and reliability.
- Multi-voltage power supply is available for electrical requirements.
- Optional motors.
- Durable powder coat finish.
- Integral type cylinder and safety device makes lift more strong.

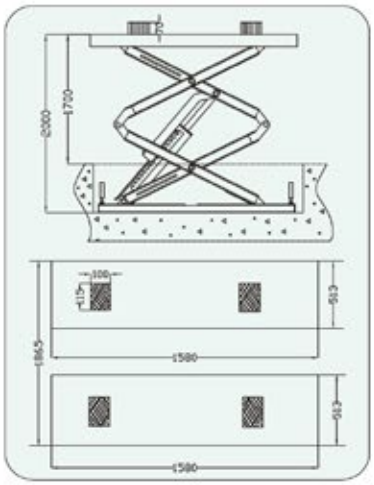

Model	Capacity	Min ground clearance	Max ground clearance	Rise time	Drop time	Power of moter	Power of supply	Tabel length	Tabel width	Package size	N.W./G.W.	QTY/20'CY
QJYJ30X	3 t	0 mm	2000 mm	60 sec.	35 sec.	2.2 kw	380V / 220V	1580 mm	505 mm	1# 1500x530x690 mm 2# 1170x390x500 mm	660/675 kgs	23 PCS

QJYJ30XS

- Minimize your shop space and increase working height with this lift.
- Lower profile and takes up limited space .
- Pneumatic self locking mechanisms.
- Quiet and smooth operation.
- Great for tire shops and oil changing stations that wants to increase speed and reliability.
- Multi-voltage power supply is available for electrical requirements.
- Optional motors.
- Durable powder coat finish.
- Stretchable platform makes it suitable for different kinds of vehicles.

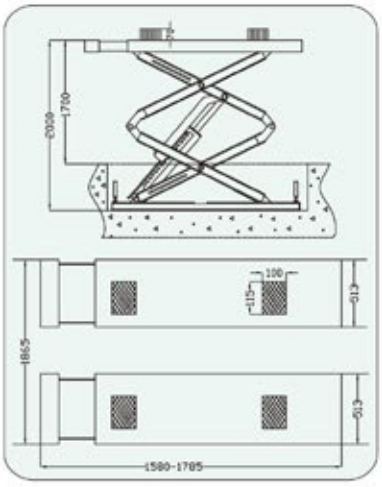

Model	Capacity	Min ground clearance	Max ground clearance	Rise time	Drop time	Power of moter	Power of supply	Tabel length	Tabel width	Package size	N.W./G.W.	QTY/20'CY
QJYJ30XS	3 t	0 mm	2000 mm	60 sec.	35 sec.	2.2 kw	380V / 220V	1585 mm	513 mm	1# 1500x530x690 mm 2# 1170x390x500 mm	690/705 kgs	23 PCS

Low Profile Scissor Lift

QJYJ30-CB 3t

- Easy installation.
- Four cylinder design, more smoothly.
- Extendable platform design, wide range of services.
- Mechanical locking device safe and reliable.
- Pneumatic unlocked and low noise.
- Design of High Strength structure to ensure security.

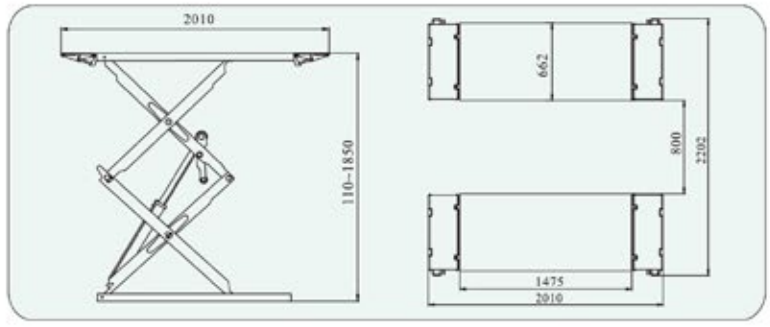

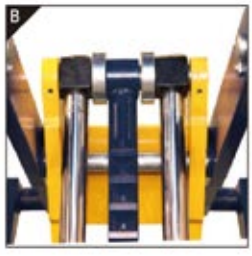

Model	Capacity	Min ground clearance	Max ground clearance	Rise time	Drop time	Power of moter	Power of supply	Tabel length	Tabel width	Package size	N.W./G.W.	QTY/20'CY
QJYJ30-CB	3 t	110mm	1850mm	60 sec.	45 sec.	2.2 kw	380V / 220V	1475mm	662mm	1#2010x700x420mm 2#1180x580x470mm	910/925 kgs	20 PCS

Low Profile Scissor Lift

QJYJ35

- Minimize your shop space and increase working height with this lift.
- Lower profile and takes up limited space.
- Pneumatic self locking mechanisms.
- Quiet and smooth operation.
- Great for tire shops and oil changing stations that wants to increase speed and reliability.
- Multi-voltage power supply is available for electrical requirements.
- Optional motors.
- Durable powder coat finish.

Optional:

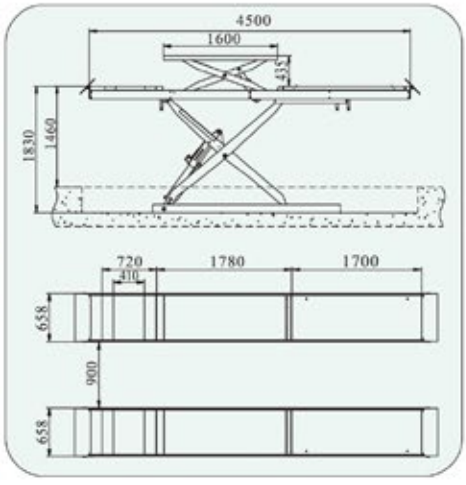

Model	Capacity	Max ground clearance	Rise time	Drop time	Power of moter	Power of supply	Tabel size	Width between table	Package size	N.W./G.W.	QTY/20'CY
QJYJ35	3.5 t	1830 mm	60 sec.	45 sec.	3.0 kw	380V / 220V	4500x650mm	900mm	1#4610x660x962mm 2#1180x580x470mm	2210/2250 kgs	6 PCS

Car Tire Changer

TRE-600 CE

Semi-automatic side swing arm

Technical Specification

Motor power	0.75 kw/0.55 kw/1.1 kw
Power supply	220 V/400 V/110 V
Max.wheel diameter	41"(1040 mm)
Max.wheel width	14"(355 mm)
Ouside clamping	10"~17"
Inside clamping	12"~20"
Air supply	8 bar
Bead breaker force	2500 kgs
N.W./G.W.	167/190 kgs
Package size	960x760x880 mm
QTY/20'CY	36 PCS

TRE-200 CE

Semi-automatic side swing arm

Technical Specification

Motor power	0.75 kw/0.55 kw/1.1 kw
Power supply	220 V/400 V/110 V
Max.wheel diameter	38"(960 mm)
Max.wheel width	13"(330 mm)
Ouside clamping	10"~18"
Inside clamping	12"~20"
Air supply	8 bar
Bead breaker force	2500 kgs
Noise level	<70 db
Package size	960x760x880 mm
N.W/G.W.	195/210 kgs
QTY/20'CY	36 PCS

CE TRE-221

Full automatic pneumatic tilting column

Technical Specification

Motor power	0.75 kw/0.55 kw/1.1 kw
Power supply	220 V/400 V/110 V
Max.wheel diameter	41"(1040 mm)
Max.wheel width	14"(355 mm)
Ouside clamping	10"~22"
Inside clamping	12"~24"
Air supply	8 bar
Bead breaker force	2500 kgs
Noise level	<70 db
Package size	960x760x930 mm
N.W/G.W.	205/217 kgs
QTY/20'CY	36 PCS

www.tongrunjacks.com

Car Tire Changer

TRE-2011

CE

Semi-automatic side swing arm

Technical Specification

Motor power	0.75 kw/0.55 kw/1.1 kw
Power supply	220 V/400 V/110 V
Max.wheel diameter	41"(1040 mm)
Max.wheel width	14"(355 mm)
Ouside clamping	10"~21"
Inside clamping	12"~24"
Air supply	8 bar
Bead breaker force	2500 kgs
N.W./G.W.	210/229 kg
Package size	960x760x1030 mm
QTY/20'CY	36 PCS

TRE-221A

CE

Full automatic pneumatic tilting column with Air Tank

Technical Specification

Motor power	0.75 kw/0.55 kw/1.1 kw
Power supply	220 V/400 V/110 V
Max.wheel diameter	41"(1040 mm)
Max.wheel width	14"(355 mm)
Ouside clamping	10"~21"
Inside clamping	12"~24"
Air supply	8 bar
Bead breaker force	2500 kgs
N.W./G.W.	210/234 kgs
Package size	960x760x1030 mm
QTY/20'CY	36 PCS

TRE-209

CE

Semi-automatic side swing arm with simple left help arm

Technical Specification

Motor power	0.75 kw/0.55 kw/1.1 kw
Power supply	220 V/400 V/110 V
Max.wheel diameter	45"(1143 mm)
Max.wheel width	16"(406 mm)
Ouside clamping	12"~24"
Inside clamping	14"~26"
Air supply	8 bar
Bead breaker force	2500 kgs
Noise level	<70 db
Package size	1130x900x1030 mm
N.W/G.W.	238/276 kgs
QTY/20'CY	24 PCS

Car Tire Changer

TRE-2098

Semi-automatic side swing arm with simple left help arm

Technical Specification

Motor power	0.75 kw/0.55 kw/1.1 kw
Power supply	220 V/400 V/110 V
Max.wheel diameter	45"(1143 mm)
Max.wheel width	16"(406 mm)
Ouside clamping	12"~26"
Inside clamping	14"~28"
Air supply	8 bar
Bead breaker force	2500 kgs
N.W/G.W.	254/310 kgs
Package size	1130x900x1030 mm
QTY/20'CY	24 PCS

TRE-236

Full automatic pneumatic tilting column Independent right helper arm, with pneumatic tire lifting device 360 rotary tire pressing helper arm. Four angle directional adjustable tire pressing shovel.

Technical Specification

Motor power	0.75 kw/0.55 kw/1.1 kw
Power supply	220 V/400 V/110 V
Max.wheel diameter	45"(1143 mm)
Max.wheel width	16"(406 mm)
Ouside clamping	12"~23"
Inside clamping	14"~26"
Air supply	8 bar
Bead breaker force	2500 kgs
N.W/G.W.	285/330 kgs
Package size(help arm)	1230x450x350 mm
Package size	1130x900x1030 mm
QTY/20'CY	20 PCS

TRE-237

Full automatic pneumatic tilting column Independent tire helper arm, with pneumatic tire lifting device 360 rotary tire pressing helper arm Four angle directional adjustable tire pressing shovel

Technical Specification

Motor power	0.75 kw/0.55 kw/1.1 kw
Power supply	220 V/400 V/110 V
Max.wheel diameter	45"(1143 mm)
Max.wheel width	16"(406 mm)
Ouside clamping	12"~23"
Inside clamping	14"~26"
Air supply	8 bar
Bead breaker force	2500 kgs
N.W/G.W.	380/428 kgs
Package size(help arm)	1550x310x550 mm
Package size	1130x900x1030 mm
QTY/20'CY	20 PCS

Car Tire Changer

TRE-229A

Pneumatically operated tiltings column with double helper arm and tubeless tire inflating system

Technical Specification

Motor power	0.75 kw/0.55 kw/1.1 kw
Power supply	220 V/400 V/110 V
Max.wheel diameter	41"(1140 mm)
Max.wheel width	14"(355 mm)
Ouside clamping	10"~21"
Inside clamping	12"~24"
Air supply	8 bar
Bead breaker force	2500 kg
Noise level	< 75 db
N.W./G.W.	357/409 kgs
Package size(main body)	1# 960x760x1030 mm
Package size(help arm)	2# 1230x450x350 mm
Package size(help arm)	3# 1550x310x550 mm
QTY/20'CY	22 PCS

TRE-206

Motorcycle Tire Claw

Technical Specification

Motor power:	0.75 kw/0.55 kw/1.1 kw
Power supply:	220 v/400 v/110 v
Max. wheel diameter:	41"(1040 mm)
Max. wheel width:	14"(355 mm)
Clamping:	6"~24"
Air supply:	8 bar
Bead breaker force:	2500 kgs
Noise level:	<75 dB
N.W./G.W.:	170/194 kgs
Package size:	960x760x930 mm
QTY/20'CY	36 PCS

Semi-automatic side swing arm
Special for motorcycle tire-changing

Motorcycle Wheel Balancer

TRE-108

Technical Specification

Max. wheel weight	65 kgs
Power supply	220 v/110 v
Balancing accuracy	±1 g
Balancing speed	80 r.p.m
Rim diameter	10"~24"
Rim width	1.5"~20"
Measuring time	8 sec.
Noise level	<70 dB
Package size	1# 760x560x1030 mm
	2# 730X350X160 mm
N.W./G.W.	1# 46/66 kgs
	2# 4.9/5.9 kgs
QTY/20'CY	60 PCS

Truck Tire Changer

TRE0568

Semi-automatic truck tire changer
Universal self-centering chuck
Clockwise and anticlockwise rotation of chuck
Rim capacity 14"-26"

Technical Specification

Rim diameter	14"-26"
Max.wheel weight	500 kgs
Max.wheel width	780 mm
Max.tyre diameter	1600 mm
Hydraulic pump motor	1.5 kw 380 V/220 V
Bead breaker force	2500 kgs
Operation control voltage	24 V
Power	220 V/400 V 50/60 Hz
N.W./G.W.	570/647 kgs
Package size	2030x1600x1000 mm
QTY/20'CY	8 PCS

TRE0598

SEMI-Automatic universal truck tire changer for industrial. Agricultural and earthmoving wheels Rim capacity 14"-22"

Technical Specification

Rim diameter	14"-42"
Max.wheel weight	1600 kgs
Max.wheel width	1050 mm (41")
Max. tire diameter	2300 mm(90")
Hydraulic pump motor	2.2kw 380 V/220 V
Bead breaker force	3300 kgs
Operation control voltage	24 V
Power	220 V/400 V 50/60 Hz
N.W./G.W.	758/850 kgs
Package size	2130x1850x1090 mm
QTY/20'CY	6 PCS

Truck tire changer has been specifically designed to mount and demount truck, bus, tractors and earthmoving vehicles tires Rim capacity 14"-56"
Bi-directional chuck with 2 rotational speeds

TRE0980

Technical Specification

Rim diameter	14"-56" with extensions
Max.wheel diameter	2500 mm
Max.wheel width	1200 mm
Max. tire weight	2000 kgs
hydraulic unit motor	4.0 KW
Power upply	380 V/400 V 50/60 Hz
N.W./G.W.	1145/1300 kgs
Package size	2310x2080x1100 mm
QTY/20'CY	4 PCS

Truck Tire Changer

Technical Specification

Rim diameter	19"~26"
Max.wheel weight	380 kgs
Max.wheel width	470 mm
Max.tyre diameter	1400 mm
Hydraulic pump motor	3.3kw 380V-3Ph
Bead breaker force	2500 kgs
Operation control voltage	24V
Overall dimensions approx	1300x1700 mm
N.W. / G.W.	485 kgs / 550 kgs
Package size	1220x1150x1720 mm
QTY/20'CY	8PCS

TRE0588T

CE

NEW PRODUCT

Technical Specification

Rim diameter	14"~48" / 14"~60"
Max.wheel weight	2000 kgs
Max.wheel width	1400 mm
Max.tyre diameter	2600 mm
Hydraulic pump motor	4.0kw
Gearbox motor	4.0kw
Operation control voltage	24V
Overall dimensions approx	2500x2000 mm
Power	400V 50/60Hz 3P
N.W. / G.W.	1433 kgs / 1737 kgs
Package size	2310x2100x1100 mm
QTY/20'CY	4 PCS

TRE0998

CE

www.tongrunjacks.com

Tire Balancer

Hand-operated distance and wheel diameter input

CE

TRE-500

Technical Specification

Motor power	0.2 KW/0.37 KW
Power supply	220 V/110 V
Balancing accuracy	±1 g
Balancing speed	200 r.p.m
Rim diameter	10"~24"
Rim width	1.5"~20"
N.W./G.W.	88/112 kgs
Package size	915x760x1230 mm
QTY/20'CY	18 PCS

TRE-800

Latest advanced technology
High-precision of self-adhesive weight position finding

Technical Specification

Max. wheel weight:	65 kg
Motor power	0.2 KW/0.37 KW
Power supply	220 V/110 V
Balancing accuracy	±1 g
Balancing speed	220 r.p.m
Rim diameter	10"~24"
Rim width	1.5"~20"
N.W./G.W.	98/122 kgs
Package size	960x760x1230 mm
QTY/20'CY	18 PCS

TRE-100

Latest advanced technology
High-precision of self-adhesive weight position finding

CE

Technical Specification

Motor power	0.2 KW/0.37 KW
Power supply	220 V/110 V
Balancing accuracy	±1 g
Balancing speed	200 r.p.m
Rim diameter	10"~24"
Rim width	1.5"~20"
N.W./G.W.	101/126 kgs
Package size	960x760x1230 mm
QTY/20'CY	18 PCS

Tire Balancer

TRE-820

CE

Latest advanced technology
High-precision of self-adhesive weight position finding

Technical Specification

Max. wheel weight:	65 kg
Motor power	0.2 KW/0.37 KW
Power supply	220 V/110 V
Balancing accuracy	±1 g
Balancing speed	220 r.p.m
Rim diameter	10"~24"
Rim width	1.5"~20"
N.W./G.W.	98/122 kgs
Package size	960x760x1230 mm
QTY/20'CY	18 PCS

TRE-579

CE

Latest advanced technology
High-precision of self-adhesive weight position finding

Technical Specification

Motor power	0.2 KW/0.37 KW
Power supply	220 V/110 V
Balancing accuracy	±1 g
Balancing speed	200 r.p.m
Rim diameter	10"~24"
Rim width	1.5"~20"
N.W./G.W.	103/126 kgs
Package size	960x760x1250 mm
QTY/20'CY	18 PCS

TRE-828

CE

Latest advanced technology
High-precision of self-adhesive weight position finding

Technical Specification

Motor power	0.2 KW/0.37 KW
Power supply	220 V/110 V
Balancing accuracy	±1 g
Balancing speed	220 r.p.m
Rim diameter	10"~24"
Rim width	1.5"~20"
N.W./G.W.	102/130 kgs
Package size	960x760x1160 mm
QTY/20'CY	18 PCS

Tire Balancer

TRE-1200

Technical Specification

Max. wheel weight:	150 kg
Rim diameter	13"~24"
Rim width	5.5"~20"
Max. Wheel Diameter.	1200 mm
Testimg time	8 s
Air pressure	6-8 bar
Power supply	220 V/400 V
N.W./G.W.	250/320 kgs
Package size	1250x960x1100 mm
QTY/20'CY	20 PCS

.Movable & easy- your good helper.
.With self-calibration and self-diagnosis functions.
.LED light & Digital display.

CE

TRE-110

Technical Specification

Optional power supply	110v(1ph)/220v(1/3ph) 380v(3ph)
Balancing speed	±120 r.p.m
Balancing accuracy	± 1g(0.04 OZ)
Measuring time	8s
N/G weight	35/42 kg(77.2/92.6 lbs)

www.tongrunjacks.com

Four Wheel Alignment

TREK206

Features:

1. Wireless communication sensor.
2. 360 degree close measurement.
3. Adopt geometry center line and thrust line principle to implement five wheels alignment.
4. One key transmit, it can operate on sensors or mouse.
5. Quickly battery charge system ,it work 10 hours continuously.

Technical Specification

Item	Measurement Accuracy	Measurement Range
Toe	±0.04°	±4°
Camber	±0.04°	±10°
Caster	±0.04°	±12°
Font/Rear Setback	±0.04°	± 2°
SAI/KPI	±0.04°	±18°
Thrust angle	±0.04°	±4°

Package Size	N.W./G.W.	QTY/20'CY
1# 840x840x1285 mm	1# 131/160 kgs	10 Sets
2# 980x600x1000 mm	2# 18/38 kgs	
3# 960x630x740 mm	3# 60/75 kgs	

TRE6002

Features:

1. It has the latest 3D alignment software which is easy to operate; 32"/≥17" LCD dual-screen display.
2. Mini-Printer is optional, which will save 4/5 consumables (international-leading).
3. The repeated measurement error is within the international standard ±0.04°.which rightly meet the need of luxury cars, more accuracy.
4. The handheld auxiliary monitor is optional.
5. Zero calibration software is optional; the sensors can be self-calibrated after the warranty period.
6. Super-low chassis vehicles can be detected.

Technical Specification

Item Range	Measurement Accuracy	Measurement Range	Total Measurement
Camber	±0.02°	±8°	±8°
Caster	±0.05°	±19°	±19°
Front wheel KPI	±0.02°	±19°	±19°
Total Toe	±0.02°	±2°	±8°
Rear wheel thrust angle	±0.02°	±2°	±84°
Toe-out on turn	±0.08°	±2°	±45°
Axle offset of Rear wheel	±0.02°	±2°	±4°
Wheel tread difference	±0.03°	±2°	±8°
Front setback	±0.02°	±2°	±4°
Rear setback	±0.02°	±2°	±4°
Wheel tread	±0.64 cm (±0.25 cm)	<265 cm (<105 in)	<265 cm (<105 in)
Wheelbase	±0.64 cm (±0.25 cm)	<533 cm (<210 in)	<533 cm (<210 in)

Package Size	N.W./G.W.	QTY/20'CY
1# 2250X470X500 mm	1# 70/85 kgs	10 Sets
2# 1200X470X440 mm	2# 25/28 kgs	
3# 2740X310X400 mm	3# 18/31 kgs	
4# 1250X810X900 mm	4# 105/120 kgs	

Temperature-control Timing Vulcanizing Machine

TRAD001

Characteristics and performance:
The machine is of automatic constant temperature. It is featured by power signal indication, short circuit protection, and optional fixed-time work or normally ON, etc.

It is mainly applicable to the repair of various tube tires , small-size cover tyres and vacuum tires.

TRAD001Q

PNEUMATIC

Technical Specification

Model	TRAD001	TRAD001Q
Input voltage	220 V or 110V	220 V or 110V
Input power	500 W	500 W
Temperature range	145-165 ℃	145-165 ℃
Repair area	60×60 mm²	60×60 mm²
Single G.W/N.W	8.3/7.9 kgs	8.95/7.9 kgs
Single package size	325x190x390 mm	330×195×510 mm
G.W/N.W.	34.35/33 kgs	37.5/35.8 kgs
QTY/CTN	4 PCS	4 PCS
Packgae size	675x405x410 mm	685x415x535 mm
QTY/20'CY	200 PCS	160 PCS

Vertical Seven-mold Constant-Temperature Vulcanizing Machine

TRAD004

TRAD004Q

PNEUMATIC

Characteristics and performance
The machine is of automatic constant temperature,could realize double-size heating, and is equipped with separate switch for control. What's more, the body mold is equipped with bow-type bracket and transom, making the machine more practical and convenient.Equipped with seven-piece molds, the machine could completely meet the demand of repair any position of tires (such as tire shoulder, tire crown, and tire side), and users only need to select corresponding mould. It is featured by power signal indication, short circuit protection, and optional 120min timing or normally ON, etc.

It is mainly applicable to the repair of various tube tires, small- and medium-size cover tires and vacuum tires.

Technical Specification

Model	TRAD004	TRAD004Q
Input voltage	220 V or 110V	220 V or 110V
Input power	500 W×2	500 W×2
Temperature range	145-165 ℃	145-165 ℃
Repair area	100×80 mm²	100×80 mm²
G.W./N.W.	62/42 kgs	64/44 kgs
Package size	545x415x1475 mm	545x415x1805 mm
QTY/20'CY	50 PCS	50 PCS

Tire Vulcanizing Machine

Technical Specification

Model	TRAD009	TRAD009Q
Working voltage	220 V	220 V
Maximum power	≈2000 W	≈2000 W
Repair temperature	lower mold 160°C, upper mold 150±10°C, and side mold 150±10°C (the temperature of lower mold is adjustable)	
N.W. / G.W.	82 / 107 kgs	85.6/120 kgs
Packgae size	775x600x1300 mm	775x600x1810 mm
QTY/20'CY	170 PCS	170 PCS

Characteristics and performance

- Use together with up, down and side mold, to better repair all sides of tires.
- Top arm and side arm can turn 90°

TRAD009

TRAD009Q

Press Mold Tire

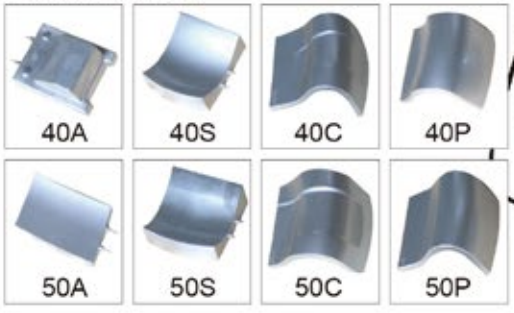

Truck Tire Vulcanizing Machine

Tire Shoulder Vulcanizing

Tire Tread Vulcanizing

Tire Side Vulcanizing

TRAD010

Press Mold Tire

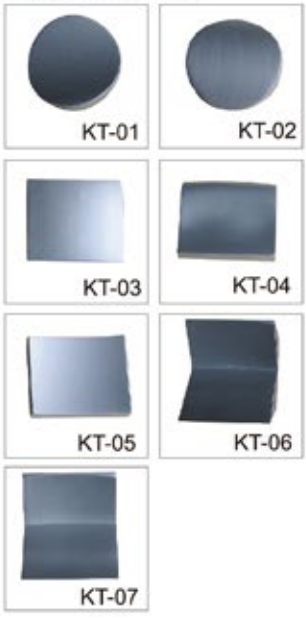

Technical Specification

Input voltage	AC 220V or 110V
Input power	2x500 W
Temperature range	145-165 °C
G.W. / N.W.	21.5 / 20 kgs
Packgae size	685x435x130 mm
QTY/20'CY	750 PCS

Tire Expander

Air lifting work platform for easy loading and working for the tire.
360 degree rotate work platform and LED light easy for using.
Fit for less than 1200R20 tire.

Technical Specification

Biggest enlargmen	350 mm
Input voltage	85-265V
Lifting height	660 mm
Working pressure	0.6-0.8Mpa
N.W. / G.W.	114.9 / 155.7 kgs
Package size	1300x850x880 mm
QTY/20'CY	16 PCS

TRAD006

NEW PRODUCT

PNEUMATIC

TRAD002

With dual foot-operated air valves adopted for control, the machine is equipped with 220V working light double cup air-source processor, which could set the air pressure to a safe value, and tool tray, which makes operation more convenient and practical. It is featured by five adjustable scopes of tyre expansion, safe pneumatic positioning, and that the cylinder is equipped with over-pressure protection device, etc.

Technical Specification

Biggest enlargmen	350 mm
Input voltage	85-265V
Lifting height	660 mm
Working pressure	0.6-0.8Mpa
N.W. / G.W.	56 / 58.5 kgs
Package size	580x550x940 mm
QTY/20'CY	80 PCS

NEW PRODUCT

TRAD003

The machine is featured by 180° rotation and within-60° skew adjustment of upper frame, six adjustable scopes of tire expansion, and safe positioning, etc. The tool tray provided together with the machine makes operation more convenient.

Technical Specification

Max. expansion distance	350 mm
G.W./N.W.	27/24 kgs
Package size	340x340x830 mm
QTY/20'CY	250 PCS

TRAD005

X style base for stability fir for most sedan

Technical Specification

Biggest enlargmen	250 mm
N.W. / G.W.	17 / 18 kgs
Package size	940x380x150 mm
QTY/20'CY	540 PCS

Tir Bead Blaster

Model:	TRAD018	TRAD018K	TRAD036	TRAD036K		TRAD07A
Work Pressure:	0.6-0.8 Mpa	0.6-0.8 Mpa	0.6-0.8 Mpa	0.6-0.8 Mpa		0.6-0.8 Mpa
Max.Work Pressure:	1.0 Mpa	1.0 Mpa	1.0 Mpa	1.0 Mpa		1.0 Mpa
Capacity:	5 Gallon	5 Gallon	10 Gallon	10 Gallon		1.8 Gallon
N.W.:	11kgs	10.7 kgs	15 kgs	15 kgs	3.5 kgs /1 pcs	16.8 Kgs / 4 pcs
G.W.:	12 kgs	11.7kgs	17 kgs	17 kgs	4.2 kgs /1 pcs	18 Kgs / 4 pcs
Package Size:	435x410x300 mm	490x420x300 mm	575x430x340 mm	575x485x340 mm	600x190x240 mm / 1 PC	615x405x525 mm / 4 PCS
QTY/20'CY:	450 PCS	415 PCS	280 PCS	280 PCS	972 PCS	720 PCS

TRAD018
5 Gallon

TRAD036
10 Gallon

TRAD018K
5 Gallon

TRAD036K
10 Gallon

NEW PRODUCT

NEW PRODUCT

TRAD07A
1.8 Gallon

Model:	TG80501	TG80701	TG81101
Capacity:	5 Gallon	7 Gallon	11 Gallon
N.W.:	6.8 kgs	8.3 kgs	11 kgs
G.W.:	7.5 kgs	9.4 kgs	12 kgs
Package Size:	495x285x300 mm	450x335x375 mm	620x330x370 mm
QTY/20'CY:	673 PCS	500 PCS	378 PCS

Air Tank

TG80501
5 Gallon

TG80701
7 Gallon

TG81101
11 Gallon

Tire Regroover

Technical Specification

Input voltage	110V or 220V
Input power	350 W
N.W. / G.W.	6.7 / 7.2 kgs (1 PC)
	28.8 / 29.8 kgs (4 PCS)
Packgae size	320x220x240 mm (1 PC)
	655x455x265 mm (4 PCS)
QTY/20'CY	1376 PCS

TRDH001

Blade style:

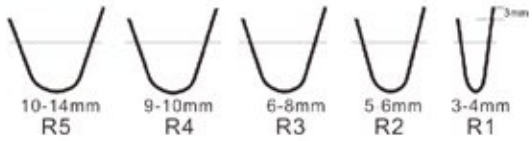

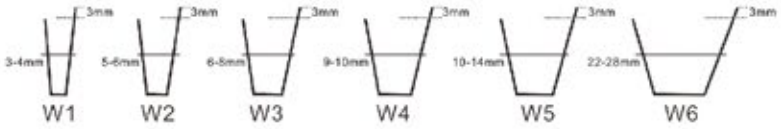

Hydraulic Ram Straightening Machine with Lathe

This unique machine is used to correct and straighten all kinds of defected steel and alloy rims ranging from 10" to 26".

TRE595M

Technical Specification

Motor Specifictions	Mechanic 0,55 kw, 1400 rpm, 0,75 hp,
	220V - 380 V
	Hydraulic 0,75 kw 1400 rpm, 1 hp,
	220V - 380 V
	Noise level 35 db
Hydraulic Piston Power	Total pressure = πr2 x 160 (Working pressure bar)
	Total pressure = 3,14x (3,15 x 3,15) = 31,156 kgs
	Total pressure = 31,156 x 160 = 4 984,96 kgs
Dimensions	Height 1250 mm ,Width 1110 mm ,Length 610 mm
Package Size	1370x880x1495 mm
N.W./G.W.	370/400 kgs
QTY/20'CY	11 PCS

Brake Lathe

TRE9350

Quickly，accurately and efficiently to cutting rotor fast and slow setting allow cutting rotor;
Quickly, accurately and efficiently to cutting drum,Finitely adjustably setting allow cutting drum ;
Three kinds of speed to choice for spindle speed ;
A convenient design allows to quickly change from rotor to drum;
Position of stop make the lathe stop automatic after the cutting ;
Fully equipped adapter package

Technical Specification

Spindle Travel	6-7/8" / 175 mm
Spindle Speed	70，80，118 RPM
Spindle Feed Speed	Min 0.002 Inch Per Revolution / 0.05 Mm/Rev
	Max 0.02 Inch Per Revolution / 0.5 Mn/Rev
Cross Feed Speed	Min 0.002 Inch Per Revolution / 0.05 Mn/Rev
	Max 0.01 Inch Per Revolution / 0.025 Mn/Rev
Handwheel Graduations	0.002" / 0.05 mm
Motor Diameter	7" / 180 mm - 15" / 381 mm
Motor Thickness	1-7/8" / 48 mm
Drum Diameter	6" / 152 mm - 28: / 711 mm
Drum Depth	6-7/8" / 175 mm
Motor	1 PH 220V 50/60Hz 3 PH 380V 50/60Hz
G.W./N.W.	290/240 kgs
Package Size	970X950X1140 mm
QTY/20'CY	20 PCS

TRE9372

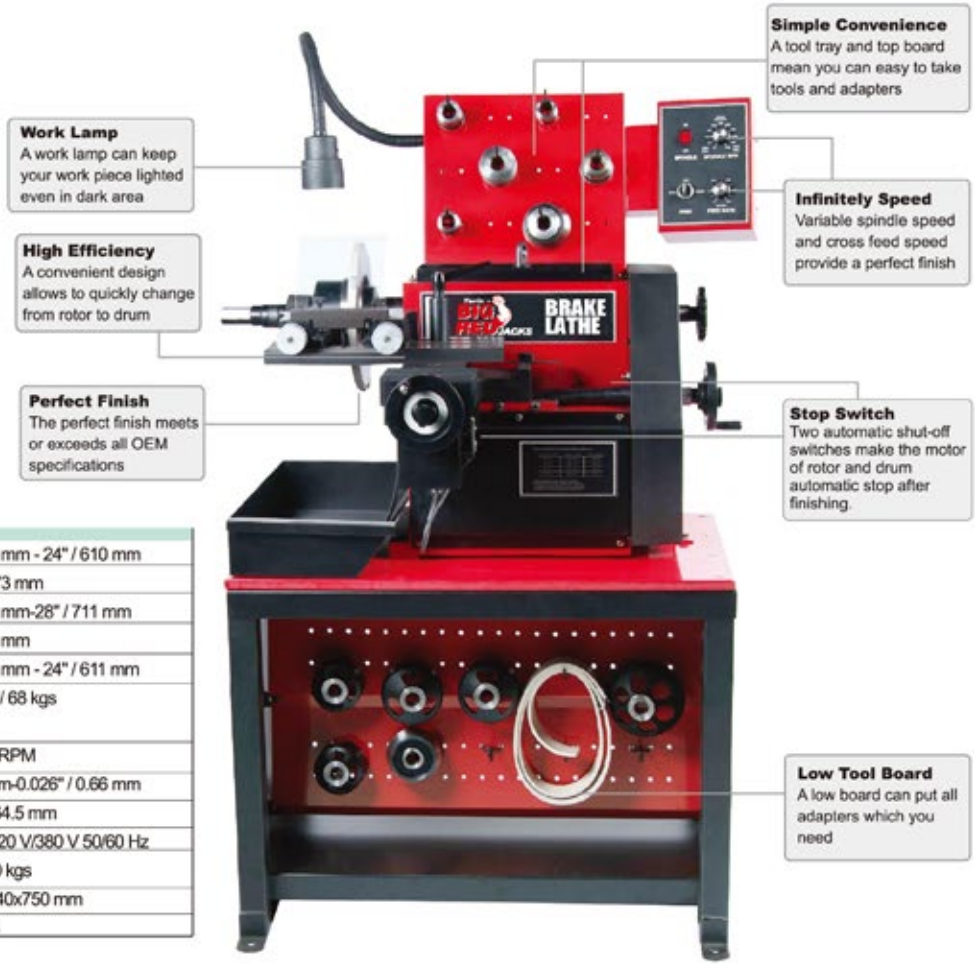

Technical Specification

Motor Diameter	4" / 102 mm - 24" / 610 mm
Motor Thickness	2.85" / 73 mm
Drum Diameter	6" / 152 mm-28" / 711 mm
Drum Depth	9" / 229 mm
Flywheel Diameter	6" / 152 mm - 24" / 611 mm
Spindle Weight Capacity (Standard 1" Arbor)	150 lbs / 68 kgs
Spindle Speed	70-320 RPM
Feed Rates - Rotor and Drum	0" / 0 mm-0.026" / 0.66 mm
Feed Rate Per Minute	2.54" / 64.5 mm
Electrical Requirement	110 V/220 V/380 V 50/60 Hz
N.W./G.W.	250/300 kgs
Package Size	700x1140x750 mm
QTY/20'CY	48 PCS

Lifting Table Cart

Handle Heavy Loads!

' Lift and lower heavy cargo for smooth,easy loading and unloading!Ideal for for transporting machinery and big tool chests,unloading trucks and more.Foot-pedal operates hydraulic tabletop.Handle-mounted pressure release.Truck ship.

300 LBS

TP01501

CE

600 LBS

TP03001

CE

1000 LBS

TP05001

CE

800 LBS

TP04001

Model	Capacity	Lifting Range(mm)	Package Size(mm)	N.W.(kgs)	G.W(kgs)	QTY/20'CY(PCS)
TP01501	300 LBS	220-730	835x500x250	43	45	234
TP03001	600 LBS	270-760	945x550x295	58	61	168
TP04001	800 LBS	360-1290	1050x560x400	104	121.5	100
TP05001	1000 LBS	280-860	965x565x305	76	79	154

Car Dolly

sold in pairs

TRF0322
450 Kgs

Model:	TRF0322
Capacity:	450 kgs
N.W.	18 kgs (Pair)
G.W.:	18.5 kgs (Pair)
Overall Size:	602x385x140 mm
Package Size:	635x420x115 mm
QTY/20'CY:	810 Pairs

sold in pairs

TRF0323
450 Kgs

Model:	TRF0323
Capacity:	450 kgs
N.W.	15.6 kgs (Pair)
G.W.:	16.5 kgs (Pair)
Overall Size:	410x300x100 mm
Package Size:	420x320x128 mm
QTY/20'CY:	1500Pairs

Hydraulic Self-loading Dolly

TRA9009 9”
TRA9012 12”

TRA9012L 12”

Model:	TRA9009	TRA9012	TRA9012L
Capacity:	680 kgs	680 kgs	680 kgs
N.W.	17 kgs	18 kgs	18.5 kgs
G.W.:	18 kgs	20 kgs	20.5 kgs
Package Size:	620x620x220 mm	680x620x220 mm	680x620x220 mm
QTY/20'CY:	320 PCS	290 PCS	290 PCS

TRA12093 9”
TRA12094 12”

Model:	TRA 12093	TRA12094
Capacity:	570 kgs	570 kgs
N.W.	13.5	14.0
G.W.:	15.5	16.0
Package Size:	620x600x220 mm	680x620x220 mm
QTY/20'CY:	330 PCS	290 PCS

Dolly Rack

Model:	TRA9009J
Net Weight:	10 Kgs
Gross Weight:	11 Kgs
Product Size:	760x470x230 mm
Package Size:	830x150x100 mm
Qty/20'cy:	1500 PCS

TRA9009J

Mechanic Tyre Dolly

Model:	TX00603
capacity:	60 Kgs
Working Range:	238-443 mm
Net Weight:	5.7 Kgs
Gross Weight:	6.5 Kgs
Product Size:	619x484x183 mm
Package Size:	620x150x120 mm
Qty/20'cy:	2000 PCS

TX00603

Hydraulic Pallet Jack

Characteristic:

- High quality integrated cast cylinder
- Oil cylinder is equipped with permanent flow valve to ensure steady descend for the goods because of over loading.
- High-balanced intensifying frame
- Economical,superior cost performance
- High strength "C" type fork
- High strenght welding hydraulic,preoure oil cylinder,equipped with safety valve

CE

TRE8220A

2000 / 2500/3000 Kgs

CE

TRE8220C

4000 / 5000 kgs

CE

TRE8220B

2000 / 2500 / 3000 kgs

Model	TRE8220A		TRE8220B		TRE8220C	
Capacity	2000 / 2500 / 3000 kgs		2000 / 2500 / 3000 kgs		4000 / 5000 kgs	
Fork Width	550 mm	685 mm	550 mm	685 mm	550 mm	685 mm
Fork Length	1100 mm	1220 mm	1100/1150 mm	1220 mm	1100 mm	1220 mm
Max.Fork Height	195 / 185 mm		195 / 185 mm		185 / 175 mm	
Min.Fork Height	85 / 75 mm		85 / 75 mm		85 / 75 mm	
Max.lifting Height	≥110 mm		≥110 mm		≥110 mm	
Materlal of the Front Whell / Loaded Wheel	Nylon / Rubber / Polyurethane		Nylon / Rubber / Polyurethane		Nylon / Rubber / Polyurethane	
N.W. / PC	80 kgs	85 kgs	80 kgs	85 kgs	175 kgs	175 kgs
G.W. / PC	85 kgs	90 kgs	85 kgs	90 kgs	180 kgs	180 kgs
Package Size	2200x560x760 mm	2300x700x700 mm	2200x560x760 mm	2300x700x700 mm	2000x600x700 mm	2200x700x700 mm
QTY / Package	6 PCS	6 PCS	6 PCS	6 PCS	4 PCS	4 PCS
QTY / 20'CY	180 PCS	144 PCS	180 PCS	144 PCS	120 PCS	96 PCS

Hydraulic high-lift pallet jack

Characteristic:

- It could be used for carrying and also as platform.
- The slowly descending system could protect the truck and cargo from damaging effectively.
- The equipped safety valve could precent over loading effectively.

CE

TRE8220H

1000 / 1500 kgs

Model:	TRE8220H	
capacity	1000 / 1500 kgs	
Fork width	550 mm	685 mm
Fork length	1100 mm	1220 mm
Lowered fork height	85 mm	
Max.fork height	800 mm	
material of the front wheel/loaded wheel	Nylon / Polyurethane	
N.W.	110 kgs	125 kgs
G.W.	120 kgs	135 kgs
Package Size	1950X560X750mm	1950X700X750 mm
QTY/Package	4PCS	
QTY/20'CY	120 PCS	96 PCS

Hand Pallet Stacker

Model:	TRE8310	TRE8320
Capacity:	1000 kgs	2000 kgs
Lift.Height:	1600 mm	1600 mm
Lowered fork height:	≤85 mm	≤85 mm
Fork Length:	1150 mm	1150 mm
Fork Outside distance:	745 mm	760 mm
Overall Length:	1380 mm	1380 mm
Overall Width:	1000 mm	1000 mm
Overall Height:	2100 mm	2100 mm
Front wheel:	Φ 80 mm	Φ 80 mm
Loaded wheel :	Φ 180 mm	Φ 180 mm
N.W.:	224 kgs	270 kgs
G.W.:	234 kgs	280 kgs
Package Size:	1400x780x1850 mm	1350x800x1870 mm
QTY/20'CY:	26 PCS	26 PCS

Model:	TRE8310E
Capacity:	1000 kgs
Max.lifting Height:	3000 mm
Lowered fork height:	85 mm
Fork Length:	1150 mm
Fork Width:	550 mm
Package Size:	1650x800x2060 mm
N.W.	330 kgs
G.W.:	340 kgs
QTY/20'CY:	32 PCS

Tire Dolly

TRX4209
300 Kgs

Model:	TRX4209
Capacity:	300 Kgs
N.W.:	18 kgs
G.W.:	18.5 kgs
Package Size:	1540x620x440 mm
QTY/20'CY	200 PCS

TRX01505
250 Kgs

Model:	TRX01505
Capacity:	250 kgs
Suitable tyre size:	165-570 mm
N.W.:	13.5 kgs
G.W.:	15 kgs
Package Size:	730x185x140 mm
QTY/20' CY:	980 PCS

TRX01506
100 Kgs

Model:	TRX01506
Capacity:	100 kgs
Package Size:	730x660x90 mm
N.W.:	5.5 kgs
G.W.:	6 kgs
QTY/20' CY:	620 PCS

Portable Tire Changer

Model:	TRK60001
N.W.:	27 kgs
G.W.:	39 kgs
Package Size:	740x555x360 mm
QTY/20' CY:	170 PCS

TRK60001
Size Adjustable

Tire Changer

Model:	TRK26101
N.W.:	13.5 kgs
G.W.:	15.5 kgs
Package Size:	890x305x310 mm
QTY/20' CY:	300 PCS

TRK26101

Dual Wheel Dolly

Patent No.:
ZL200910231901

Model:	TX15002S
Capacity:	1.5Ton
Lifting Range:	0-770mm
Product Size:	1270X990X1340mm
N.W.:	106 Kgs
G.W.:	121 Kgs
Package Size:	1398x448x368 mm
QTY/20' CY:	120 PCS

CE

TX12002
1.5 Ton

Model:	TX12002
Capacity:	1.5Ton
Lifting Range:	0-770 mm
Product Size:	1270X990X1340 mm
N.W.:	120 Kgs
G.W.:	148 Kgs
Package Size:	1310x1030x320 mm
QTY/20' CY:	56 PCS

TX15002S
1.5 Ton

Wheel Dolly

TX12007
1.5 Ton

Model:	TX12007
Capacity:	1.5 Ton
Lifting Range:	0-770 mm
Product Size:	1390x1065x1375 mm
N.W.:	112 kgs
G.W.:	145.5 kgs
Package Size:	1400x805x475 mm
QTY/20' CY:	44 PCS

Model:	TX00801
Capacity:	100 kgs
Min.Height:	1010 mm
Max.Height:	1910 mm
N.W.:	62 kgs
G.W.:	66 kgs
Package Size:	1175x710x242 mm
QTY/20' CY:	117 PCS

TX00801
100 Kgs

CE

Patent No.:
ZL201310265878.3
ZL201320241823.4

Quickly Lifting Pedal

Rolling Adjust with Ball Bearing

www.tongrunjacks.com

Hydraulic Drum Transporter

Model:	TRGA2502
Capacity:	250 kgs
Lifting Height:	280 mm
Max.Diameter:	600 mm
Max.Length:	915 mm
Overall Length:	800 mm
Overall Width:	760 mm
Overall dimension:	820x780x1250 mm
N.W.:	40 kgs
G.W.:	45 kgs
QTY/Package:	2 PCS/CTN
Package Size:	900x900x350 mm
QTY/20' CY:	72 PCS

CE

TRGA2502
250 Kgs

Drum Transporter

Model:	TRTC0107
Capacity:	300 Kgs
N.W.:	15 kgs
G.W.:	17 kgs
Package Size:	840x590x220 mm
QTY/20'CY:	250 PCS

TRTC0107
300 Kgs

Model:	TRX10001
Capacity:	1 Ton
N.W.:	68 kgs
G.W.:	75 kgs
Product Size:	1040x1090x890 mm
Package Size:	1160x900x160 mm
QTY/20' CY:	150 PCS

CE

TRX10001
1 Ton

Forklift Jack

Model:	TC50001
Lifting Capacity:	Scissors end 4 Ton Scissors post 5 Ton
Min. Height:	Scissors end 70 mm Scissors post 420 mm
Max.Height:	Scissors end 440mm Scissors post 740 mm
N.W.	45 kgs
G.W.:	46.5 kgs
Package Size:	745x263x340 mm
QTY/20'CY:	361 PCS

TC50001
4 Ton / 5 Ton

CE

www.tongrunjacks.com

Spring Compressor

TRK1500-2
1 Ton

Model:	TRK1500-2
Capacity:	1 Ton
Compression Length:	210-570 mm
Ram Travel:	325 mm
Spring Size:	101.6-254 mm
Compressed Spring Diameter:	400 mm
N.W.:	31 kgs
G.W.:	36 kgs
Packagr Size:	1230x290x190 mm
QTY/20'CY:	300 PCS

TRK1500-3
1 Ton

Model:	TRK1500-3
Capacity:	1 Ton
Compressed Spring Diameter:	200 mm
Compression Length:	200-500 mm
N.W.:	28.5 kgs
G.W.:	32.5 kgs
Package Size:	830x350x190 mm
QTY/20'CY:	300PCS

TRK1500-5
1 Ton

PNEUMATIC

Model:	TRK1500-5
Capacity:	1 Ton
Max Working Length:	480 mm
Spring Size:	210-570 mm
N.W.:	34 kgs
G.W.:	38 kgs
Package Size:	1200x290x220 mm
QTY/20'CY:	450 PCS

TRK1500-6
1 Ton

OPTION

TRK1500-6Q
1 Ton

PNEUMATIC

Spring Compressor

TRK3211
1 Ton

Model:	TRK1500-6	TRK1500-6C (with cover)	TRK1500-6Q	TRK1500-6QC (with cover)
Capacity:	1 Ton	1 Ton	1 Ton	1 Ton
Compressed Spring Diameter:	400 mm	400 mm	400 mm	400 mm
Compression Length:	210-570 mm	210-570 mm	210-570 mm	210-570 mm
N.W.:	30 kgs	31.5 kgs	30 kgs	31.5 kgs
G.W.:	34 kgs	35.5 kgs	34 kgs	35.5 kgs
Package Size:	1190x290x220 mm	1190x290x220 mm	1190x290x220 mm	1190x290x220 mm
QTY/20'CY:	300PCS	300PCS	300PCS	300PCS

Model:	TRK3211
Capacity:	1 Ton
Ram Stroke:	150 mm
Compressed Spring Diameter:	100-200 mm
Working Length:	290 mm
N.W.	24.5 kgs
G.W.:	25.5 kgs
Package Size:	700x190x250 mm
QTY/20'CY	800 PCS

Pick -up Truck Crane

TRF30603
0.5 Ton

TRF2108
0.5 Ton

TRF30605
1 Ton

TRF30604
1 Ton

Model	Capacity	Min. Height (mm)	Max. Height (mm)	N.W. / G.W. (kgs)	Package Size (mm)	QTY/20'CY (PCS)	MOQ (PCS)
TRF2108	0.5 Ton	870	1800	43 / 45	1070x270x210	350	-
TRF30603	0.5 Ton	0	2015	1# 7.5 / 8.7 2# 29 / 30	1# 290x290x330 2# 1090x270x200	290	20
TRF30605	1 Ton	180	1710	1# 13 / 14 2# 33 / 35	1# 340x330x320 2# 1130x280x180	200	50
TRF30604	1 Ton	0	2300	1# 18 / 20 2# 35 / 37	1# 275x275x310 2# 1260x300x240	200	20

TELESCOPING GANTRY CRANE

TRAL1130-1
1000 Kgs

Model	Capacity	Min.Height (mm)	Max.Height (mm)	N.W./G.W. (kgs)	Package Size (mm)	QTY/20'CY (PCS)
TRAL1130-1	1000 kgs	3300	4900	236/270	2860x640x360	36

Mini Tilting Lift

TAL15001
1500 Kgs

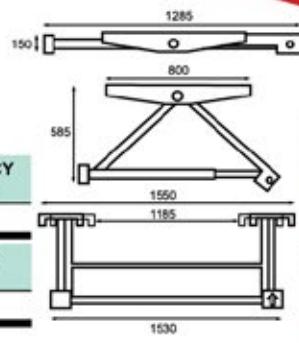

Model	Capacity	Net Weight (kgs)	Gross Weight (kgs)	Package Size (mm)	QTY/20'CY (PCS)
TAL15001	1500 kgs	58	75	1700x860x260	33

Auto Twirler

The Auto Twireler is a universal restoration rotisserie that lets user twirl a car body or body/frame 360 and lock in any position to allow easy access to hard-to-reach areas,Makes welding,rust vrepair,scraping,blasting,cleaning,painting and other restoration tasks much easier,Holds up to 1 ton.Can be made short enough to hold a truck cab,or extended up to 20 feet to hold a full-sized 1960s Ameriacn muscle car. Rolls on 6 heavy-duty swivel casters. Plus model includes two 3-ton hydraulic jacks.2 balancer attachments.Requires 8-ft, ceiling and 1702 mm base width for clearance.

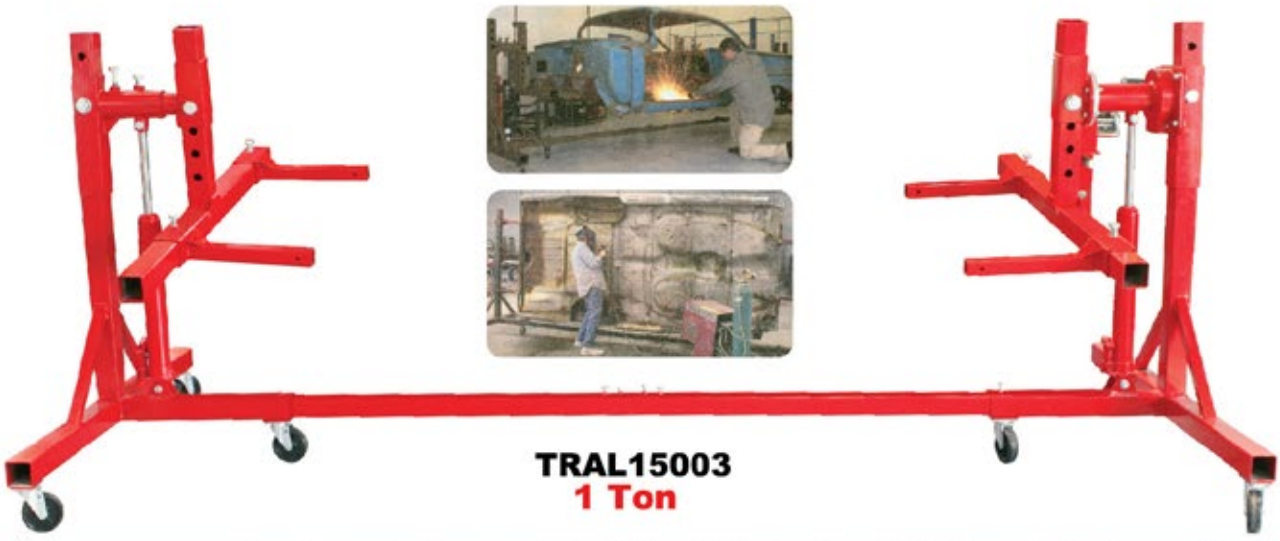

TRAL15003
1 Ton

Model	Capacity	Min. Height (mm)	Max. Height (mm)	Adjusting Width (mm)	Adjusting Length (mm)	N.W. / G.W. (kgs)	Package Size (mm)	QTY/20'CY (PCS)
TRAL15003	1 Ton	520	1280	420 - 1240	3600 - 5000	225 / 260	1880x825x400	30

Car Mini Lift

TRA6000B
1.5 Ton
Foot Pump

TRA6000
1.5 Ton
PNEUMATIC

Model	Capacity	Max. Height (mm)	N.W. / G.W. (kgs)	Package Size (mm)	QTY/20'CY (PCS)	MOQ (PCS)
TRA6000	1.5 Ton	1100	110 / 115	1110x730x300	100	5
TRA6000B	1.5 Ton	1100	110 / 115	1110x730x300	100	5

Air Bumper Jack

TRA2500
1.25Ton

Model	Capacity	Min.H (mm)	Max.H (mm)	Lifting.H (mm)	N.W. / G.W. (kgs)	Package Size (mm)	QTY/20'CY (PCS)
TRA2500	1.25 Ton	280	1080	800	88 / 89	950x940x1200	20

Auto Multi-functional Paint Stand

Nonpolar rotation;PU universal brake wheel move freely;Handle,pedal adjustment lock anywhere;Brace bar height is adjustable.Fix engine hood,panel etc;Process both polishing and painting on the stand, can move to spray booth freely.

TRX010001 Size:6+2
Package Size: 1230X300X170mm
N.W.:28 kgs
G.W.:30 kgs

TRX010002 Size:8+2
Package Size: 1970X320X180mm
N.W.:33 kgs
G.W.:34.5 kgs

TRX010001

TRX010002

X Shape Engine Hood And Windshield Stand

This stand is used for laying windshield or engine hood;4 universal wheels make it easy to move;Width and height can be ajustable freely;Top contact surface is rubber,to avoid scratches. (Mainly used for windshield moving and making adhesive)

Package Size: 1060x320x130 mm
N.W.:15 kgs
G.W.:16.4 kgs

5mm Silica gel

TRX010021

X Shape Locking Polishing Stand

This stand suits bumper polishing and other accessories short time placing.

Package Size: 128x620x100 mm
N.W.:12 kgs
G.W.:13.6 kgs

TRX010071

Engine Hood,panel,fender Paint Stand

This is a specified paint stand for engine hood, door panel,and fender,convenient and practical
Package Size: 1350x350x140 mm
N.W.:22 kgs
G.W.:23.5 kgs

TRX010023

X Shape Laying Stand

This X shape stand is made of steel pipes which are bended and powder coated. Adjusting the chains over two sides makes different heights. The stand is covered with PU, which protects bumpers and windshields against scratching.

diameter 25 mm
thickness 2mm
Package Size(1ctn/2pcs):
1070x500x90 mm
N.W.:11.5 kgs
G.W.:12.8 kgs

TRX020020

Accident Vehicle Moving Dolly

Made of galvanized sheet by laser cutting and edge curving,assembled with heavy duty PU universal wheels. Left and right sides can be extended freely.
Moving accident cars easily (front wheels and rear wheels damaged)
Improving workshop utilization rate.

Material:
6mm galvanized sheet, 6inches universal heavy duty wheels;
Loading capacity: 2 ton

Package Size: 1350x250x230 mm
N.W.:77 kgs
G.W.:79.6 kgs

TRX030021
2 Ton

Dent Pulling Machine

- Adopt international advanced technology, controlled by a microcompuljr processor, operating by the gear that in line with the welding work, can achieve the best welding effect.
- Torch detect switch let user comprehensive understand equipment's workiring.
- With a variety of welding functions, sheet metal tempering, washer, directly welding, pressing waveform solder wire, stud, OT gasket, triangle washer,etc.

TRSG8500

TRG8900

Multifunction Puller | Claw Puller | Spot Welding Puller | Pneumatic Sucker

Mig Welding Machine

TRBC270AL

Adjustable Gear 1-10

TRBC270N

CE

DENT PULLING MACHINE ---Technical Parameters

Type	Input Voltage	Frequency	Rated Power	Floating Voltage	Welding Current	Max Output Power	Duty Cycle	Automatic Working Time	Package Size(LxWxH)	G.W.
TRSG8900	2PH380V/220V	50/60Hz	5KVA	12.5V	200-8900A	20KVA	15%	0.1-2.5s	650x490x1020 mm	84 kgs
TRSG8500	2PH380V/220V	50/60Hz	5KVA	6-12V	200-8500A	20KVA	15%	0.1-2.5s	580x440x920 mm	73 kgs

MIG WELDING MACHINE ---Technical Parameters

Type	Input Voltage	Frequency	Rated Power	Floating Voltage	Welding Current	Curent Range	Duty Cycle	Welding Diameter	Welding Thickness	Package Size(LxWxH)	G.W.
TRBC270AL	3PH380V	50/60Hz	12KVA	20-36V	50-270A	50-270	35%	0.8-1.2mm	0.8-6mm	1000x520x920 mm	85kgs
TRBC270N	3PH380V	50/60Hz	9KVA	20-36V	270-50A	50-270	35%	0.8-1.0mm	0.8-6mm	110x550x1030 mm	117kgs

Shortwave Infrared Curing Lamp

- Made from Aluminum alloy, 304 stainless steel mirror reflector and other special material.
- Applying to drying the painting work for spot damage from the car body, avoiding the heating up the whole spray booth which highly reduce the cost
- Suitable for drying the spot damage under one area of three panels.
- Unique electronic timer, digital control system for half-power or full-power optional; Each emitter can be independently controlled.

TRSG3D

TRSG2D

CE

Type	TRSG2D	TRSG3D
Input Voltage	1PH220V	1PH220V
Frequency	50/60Hz	50/60Hz
Rated Power	2KW	3KW
Adjustable Height	250-1200mm	400-2500mm
Preheating Time	1-5min	1-5min
Drying Time	1-15min	1-15min
Curing Distance	600-800mm	600-800mm
Working Current	5-10A	5-15A
Curing Temperature	60-70°C	60-70°C
Curing Area	800x8000mm	800x1000mm
N.W. / G.W.	1#:3.5 / 6 kgs 2#:18 / 20 kgs	1#:9.5 / 15 kgs 2#:21 / 25 kgs
Package Size (LxWxH)	1#:90x90x1550 mm 2#: 780x620x350 mm	1#:1570x160x590 mm 2#: 820x340x1040 mm

Fender Reforming Tool

TRF06011

Model:	TRF06011
N.W.:	7 kgs
G.W.:	8 kgs
Package Size:	370x350x150 mm
QTY/20'CY:	1500 PCS

Instroduction:

1.Use for fender collision repair or fender or to increase fender clearance;
2.Fit most cars and light trucks with 4 or 5 lugs;
3.Simple and easy to use;
4.Roller works on fender from inside wheel well;
5.Attached hitch pin allows for wide or narrow angle;
6.Adjustable arm has second telescoping arm with roller that allows for 180 degrees wheel swivel

Frame Straightener

Model:	TW10001
Capacity:	10 Ton
N.W.:	165 kgs
G.W.:	190 kgs
Package Size:	3030x400x330 mm
QTY/20'CY:	50 PCS

CE

TW10001
10 Ton

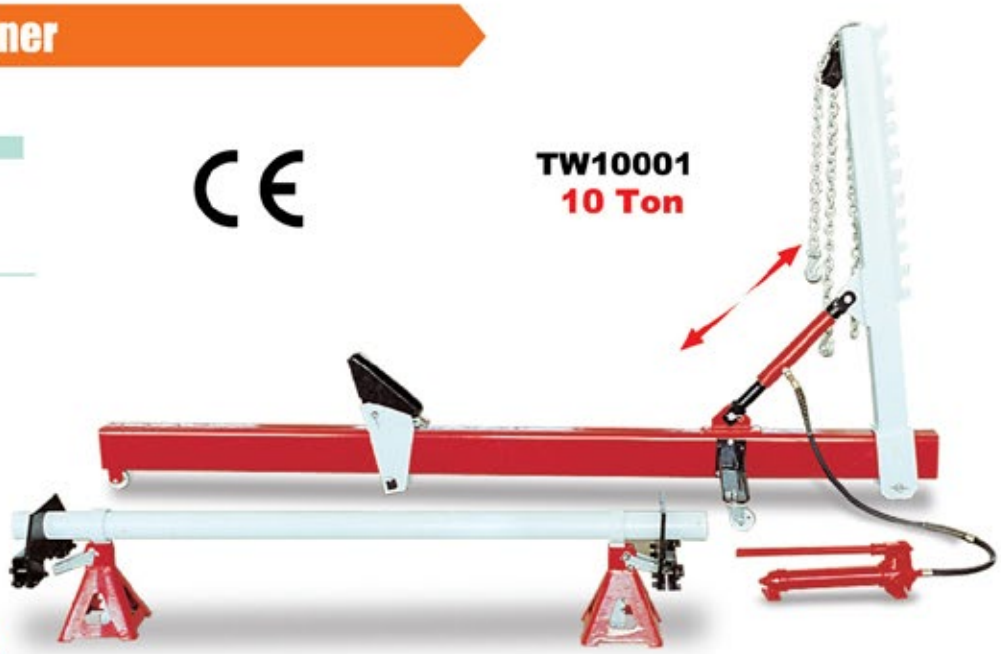

TW10002
10 Ton

Model:	TW10002
Capacity:	10 Ton
N.W.:	170 kgs
G.W.:	200 kgs
Package Size:	3040x400x330 mm
QTY/20'CY:	50 PCS

Hydraulic Pipe Bender

TRM03003-2
16 Ton

TRM03003-3
12TON (1/2"-2)
TRM03003-4
16TON (1/2"-3)

Model:	TRM03003-2
Package Size:	770x360x235 mm
N.W.:	67 kgs
G.W.:	72 kgs
QTY20'CY:	270 PCS

Mould Size

Metric system (mm)	British System (in)	Outer Diameter (mm)	Thickness (mm)	Pipe Bending Angle (d)	Working Pressure (Mpa)	Stroke (mm)
15	1/2"	21.25	2.75	π/2<α<π	61	285
20	3/4"	26.75	2.75	π/2<α<π	61	285
25	1"	33.50	3.25	π/2<α<π	61	285
32	1-1/4"	42.25	3.25	π/2<α<π	61	285
40	1-1/2"	48	3.50	π/2<α<π	61	285
50	2"	60	3.50	π/2<α<π	61	285
65	2-1/2"	75.50	3.75	π/2<α<π	61	285
80	3"	88.50	4	π/2<α<π	61	285

Model:	TRM03003-3
Package Size:	770x350x270 mm
N.W.:	48 kgs
G.W.:	56 kgs
QTY20'CY:	400 PCS

Model:	TRM03003-4
Package Size:	770x350x270 mm
N.W.:	60 kgs
G.W.:	68 kgs
QTY20'CY:	350 PCS

Mould Size

Metric system (mm)	British System (in)	Outer Diameter (mm)	Thickness (mm)	Pipe Bending Angle (d)	Working Pressure (Mpa)	Stroke (mm)
15	1/2"	21.25	2.75	π/2<α<π	59	230
20	3/4"	26.75	2.75	π/2<α<π	59	230
25	1"	33.50	3.25	π/2<α<π	59	230
32	1-1/4"	42.25	3.25	π/2<α<π	59	230
40	1-1/2"	48	3.50	π/2<α<π	59	230
50	2"	60	3.50	π/2<α<π	59	230
65	2-1/2"	75.50	3.75	π/2<α<π	59	230
80	3"	88.50	4	π/2<α<π	59	230

TRA0802
8 Ton

TRA0802S
8 Ton

TRA1202
12 Ton

Mould Size

1/2" 3/4" 1" 1-1/4" 1-1/2" 2"

Model:	TRA0802	TRA0802S
Capacity:	8 Ton	8 Ton
N.W.	20 kgs	22 kgs
G.W.:	21 kgs	25 kgs
Package Size:	510x520x160 mm	615x590x165 mm
QTY/20'CY':	620 PCS	450 PCS

Model:	TRA1202
Capacity:	12 Ton
N.W.	32 kgs
G.W.:	34 kgs
Package Size:	650x560x200 mm
QTY/20'CY':	420 PCS

www.tongrunjacks.com

Hydraulic Pipe Bender

TRA1502
15 Ton

Model:	TRA1502
Capacity:	15 Ton
N.W.	58 kgs
G.W.:	61 kgs
Package Size:	690x630x220 mm
QTY/20'CY':	270 PCS

CE

Pedal Log Splitter

CE

Patent No.:
ZL201210025083.0
ZL201210025081.1
ZL201220036192.8

Optional: Protective guard

Model:	TPC08001
Maximum Load Pressure:	3 Ton
Maximum Log Φ :	160 mm
Maximum Working Range:	540 mm
Vertiacl Ram Travel:	145 mm
N.W.:	28 kgs
G.W.:	32 kgs
Package Size:	1135x390x295 mm
QTY/20'CY:	196 PCS

TPC08001
3 Ton

Compact tubing bender

TRA6002

TRA6001

Model	TRA6002
Die Size:	25.4mm,31.75mm,38.1mm,44.45mm, 50.8mm,63.5mm,67mm
N.W.:	16 kgs
G.W.:	18 kgs
Package Size:	700x280x130 mm
QTY/20'CY:	850 PCS
MOQ:	30 PCS

Model	TRA6001
Die Size:	25.4mm,31.75mm,38.1mm,44.45mm, 50.8mm,63.5mm,67mm
N.W.:	24 kgs
G.W.:	26 kgs
Package Size:	920x280x270 mm
QTY/20'CY:	650 PCS
MOQ:	30 PCS

Air Compressor

Model	Voltage	Frequency	Power				Pressure		Tank		Package Size	N.W.	G.W.	QTY/20'CY
			Kw	Hp	Cfm	L/mN	Psi	Bar	L	GALON	LxWxH(mm)	Kgs	Kgs	PCS
TRA024L	220	50	1.5	2	6.9	196	116	8	24	6	590x290x630	24	26	225
TRAE050BM	220	50	1.5	2	6.9	196	116	8	50	13	770x330x730	33	35	156
TRAE050VFL	220	50	2.2	3	13.9	392	116	8	50	13	770x380x740	41	43.2	126
TRAE100VFL	220	50	2.2	3	13.9	392	116	8	100	26	1090x400x840	54	57	50
TRAE100ZA	220	50	2.2	3	10.2	290	116	8	100	26	1090x450x840	64	67	50
TRAE150ZA	220	50	2.2	3	10.2	290	116	8	150	38.7	1400x520x950	103	106	32
TRAE020GB	220	50	1.5	2	6.9	196	116	8	77	20	550x420x1245	38	40	50
TRAE200TD	380	50	3	4	18.5	525	116	8	200	51.6	1400x540x1100	130	142	32
TRAE300VD	380	50	4	5.5	21.2	600	116	8	300	77.4	1700x570x1190	180	200	12

TRAE024L
24 L

TRAE050BM
50 L

TRAE050VFL
TRAE100VFL
50 L / 100 L

TRAE100ZA
TRAE150ZA **100 L / 150 L**

TRAE020GB
77 L

TRAE200TD **200 L**

TRAE300VD
300 L

www.tongrunjacks.com

Air Hose Reel

TRI03010Q
TRI03011Q

TRI03015Q

TRI03020Q
TRI03021Q

TRI03030Q

Model:	TRI03010Q	TRI03011Q	TRI03015Q	TRI03020Q	TRI03021Q	TRI03030Q
Hose Length:	10+1M/33FT	14+1M/46FT	15+1.5M/50FT	20+2M/66FT	15+1.5M/50FT	30+2M/100FT
Hose Material:	□PVC □PU	□PVC □PU	□PVC	□PVC □PU	□PVC	□PVC □PU
Case Material:	PP	PP	PP	PP	PP	PP
Working Pressure:	18 Bar	18 Bar	18 Bar	18 Bar	18 Bar	18 Bar
Fitting:	□1/4"BSPT □1/4"NPT	□1/4"BSPT □1/4"NPT	□1/4"BSPT □1/4"NPT	□1/4"BSPT □1/4"NPT	□1/4"BSPT □1/4"NPT	□1/4"BSPT □1/4"NPT
Hose Size:	5/16"	1/4"	□3/8"	□3/8"	□1/2"	□3/8"
Gw/nm.	4.38/3.9KGS	4.38/3.9KGS	7.3/6.7KGS	10.35/9.6KGS	10.35/9.6KGS	13.25/12.4KGS
Packing Size(1pc):	29.5*16.5*33CM	295x165x33 mm	440x225x410 mm	51*27*47CM	51*27*47CM	54*29*50.5CM
Packing Size(1pc):	60.5*34.5*35CM 4PC/CTN	605x345x350 mm 4PC/CTN	1PC/CTN	1PC/CTN	1PC/CTN	1PC/CTN
20'QTY:	1428PCS	1428PCS	690PCS	420 PCS	420PCS	360PCS
MOQ:	50PCS	50 PCS	50 PCS	50 PCS	50 PCS	50 PCS

Steel Air Hose Reel

TRI07115

TRI08030

Model:	TRI07115	TRI08030
Hose Length:	15+1M/50FT	30+1M/100FT
Hose Material:	□PVC □PU	□PVC □PU
Case Material:	PP	PP
Working Pressure:	18 Bar	18 Bar
Fitting:	□1/4"BSPT □1/4"NPT	□1/4"BSPT □1/4"NPT
Hose Size:	□3/8"	□5/16"
Gw/nm.	9.5/8.5KGS	10.8/9.8KGS
Packing Size(1pc):	425x200x475 mm	337x288x368 mm
Packing Size:	1PC/CTN	595x350x385 mm 2PC/CTN
20'QTY:	606PCS	790PCS
MOQ:	100 PCS	100 PCS

Model:	TRI03315D	TRI03325E
Hose Length:	14+1M/46FT	10+1M/30FT
Hose Material:	□ H05VV-F3G1.5MM2	□ H07RN-F3x2.5MM2
Case Material:	PP	PP
Volt:	230V	230V
Power:	1000-3000W	1500-3500W
Gw/nm.	2.28/5 KGS	5.28/5 KGS
Packing Size(1pc):	295x165x33 mm	295x165x330 mm
Packing Size:	605x345x350 mm 4PC/CTN	605x345x35 mm 4PC/CTN
20'qty:	1428PCS	1428PCS

Model:	TRI03315E
Hose Length:	25+1M/82FT
Hose Material:	□ H05VV-F3G1.5MM2
Case Material:	PP
Volt:	230V
Power:	1000-3000W
Gw/nm.	8.5/7.5KGS
Packing Size(1pc):	320x200x340 mm
Packing Size:	420x335x360 mm 2PC/CTN
20'qty:	1318PCS

Electric Cable Reel

TRI03315D
TRI03325E

TRI03315E

Dry / Wet Vacuum Cleaner

TRF20-G

TRF30-G

TRF30-DG

TRF30-HG

TRF70-2P

TRF70-3P

Model	TRF20-G	TRF30-G	TRF30-DG	TRF30-HG	TRF70-2P	TRF70-3P
Tank Capacity	20 L	30 L	30 L	30 L	70 L	70 L
Rated Power(W)	1400 W	1400 W	1400 W	1400 W	2000 W	3000 W
Rated Voltage(V)	220-240 V	220-240 V	220-240 V	220-240 V	220-240 V	220-240 V
Nomal Frequency(Hz)	50 Hz / 60 Hz	50 Hz / 60 Hz	50 Hz / 60 Hz	50 Hz / 60 Hz	50 Hz / 60 Hz	50 Hz / 60 Hz
Vacuum suction(KPA)	>19 KPA	>19 KPA	>19 KPA	>19 KPA	>19 KPA	>19 KPA
Air flow	46 L / S	46 L / S	46 L / S	46 L / S	106 L / S	120 L / S
Accessory diametet(mm)	40 mm	40 mm	40 mm	40 mm	40 mm	40 mm
Length of cable(m)	5 m	5 m	5 m	5 m	5 m	5 m
Package	1 unit / carton	1 unit / carton	1 unit / carton	1 unit / carton	1 unit / carton	1 unit / carton
Conton dimension(cm)	40X45X58 cm	40X45X72 cm	40X45X72 cm	51X46X81 cm	63X59X100 cm	63X59X00 cm
NW/GW	10 / 11 kgs	11 / 12 kgs	11 / 12 kgs	11.5/13 kgs	24 / 28 kgs	26 / 31 kgs
Conveyance 40HQ	525 PCS	450 PCS	450 PCS	366 PCS	175 PCS	175 PCS
Moq:	50 PCS	50 PCS	50 PCS	50 PCS	20 PCS	20 PCS

Parts Washer

TRG4001-3.5
3-1/2 Gallon

Model:	TRG4001-3.5
N.W.:	6.5 kgs
G.W.:	7.5 kgs
Package Size:	470x360x250 mm
QTY/20'CY:	700 PCS

Model:	TRG4001-20
N.W.:	23 kgs
G.W.:	26 kgs
Package Size:	790x550x320 mm
QTY/20'CY:	210 PCS

TRG4001-20
20 Gallon

Model:	TRG4001-40
N.W.:	42 kgs
G.W.:	45 kgs
Package Size:	1140x550x330 mm
QTY/20'CY:	145 PCS

TRG4001-40
40 Gallon

Specification:

Suitable for different kind of solvent at same time
Double driving pump for higher cleaning efficiency
Two Separated tank with perfect welding seal
Solvent capacity:24 Gallon
Electrical requirement:110V,60Hz (240V/50Hz)

TRG-PW40G-II
40 Gallon

Model:	TRG-PW40G-II
N.W.:	45 kgs
G.W.:	48 kgs
Package Size:	1140x550x330 mm
QTY/20'CY:	145 PCS

Parts Washer Trolley

TRG4001-20M
20 Gallon

Model:	TRG4001-20M
N.W.:	34 kgs
G.W.:	37 kgs
Package Size:	850x570x500 mm
QTY/20'CY:	108PCS

Pneumatic Cleaning Tank

Model:	TRG4502
N.W.:	39 kgs
G.W.:	44 kgs
Package Size:	790x550x710 mm
QTY/20'CY:	80 PCS

TRG4502
20 Gallon

Portable Sandblaster

Model:	TRG4012
Overall Dimensions:	830x480x330 mm
Hose Length:	2500 mm
Work Pressure:	60-125 PSI
N.W.:	17 kgs
G.W.:	19 kgs
Package Size:	770x415x365 mm
QTY/20'CY:	233 PCS

Model:	TRG4020B
Overall Dimensions:	920x780x380mm
Hose Length:	2500 mm
Work Pressure:	60-125 PSI
N.W.:	21 kgs
G.W.:	23 kgs
Package Size:	880x460x420 mm
QTY/20'CY:	160 PCS

TRG4012
10 GALLON

TRG4020B
20 GALLON

Benchtop Steel Blast Cabinet

Model:	TRG4092
Overall Size:	630x530x480 mm
Working Space:	506x460x280 mm
N.W.:	18 kgs
G.W.:	20 kgs
Package Size:	640x510x520 mm
QTY/20'CY:	160 PCS

TRG4092

Vertical Sandblast Cabinet

Model:	TRG4222
N.W. / G.W.:	43/47 kgs
Package Size:	950x620x610 mm
QTY/20'CY:	63 PCS

TRG4222

Vertical Sandblast Cabinet

TRG4222-R

Model:	TRG4222-R
Overall Size:	940x600x1620 mm
Working Space:	945x605x605mm
N.W.:	90 kgs
G.W.:	105 kgs
Package Size:	1280x990x760 mm
QTY/20'CY:	27 PCS

TRG4222-W

Model:	TRG4222-W
Overall Size:	1350x900x1700 mm
Working Space:	1210x600x580 mm
N.W.:	125 kgs
G.W.:	157 kgs
Package Size:	1280x1250x760 mm
QTY/20'CY:	16 PCS

TRG160-H

Model:	TRG160-H
Overall Size:	790x610x1260 mm
Working Space:	736.6x558.8x452.1 mm
N.W.:	46 kgs
G.W.:	49 kgs
Package Size:	800x610x730 mm
QTY/20'CY:	75 PCS

TRG160

Model:	TRG160
Overall Size:	785x595x1150 mm
Working Space:	736.6x558.8x452.1 mm
N.W.:	29.5 kgs
G.W.:	32 kgs
Package Size:	800x610x520 mm
QTY/20'CY:	100 PCS

Low-Profile Oil Drain

NEW PRODUCT

TRE19101
TRE19152
TRE19171

17 Gallon Low-profile Oil drain with an aluminum manual pump
With durable HDPE material;
Great ideal for low-profile applications, with 6-3/4in. height;
Including T-handle and 4x4 in. heavy-duty casters;
Built-In aluminum manual pump with 5.9 ft. evacaution hose with J hook for fast fluid draining.

TRE19152A

TRG70L-2

Model:	TRE19101	TRE19152	TRE19171	TRE19152A
Capacity:	10 Gallon	15 Gallon	17 Gallon	15 Gallon
Cabinet Size:	700x430x140 mm	880x530x140 mm	880x525x140 mm	880x530x140 mm
N.W.:	13 Kgs	16.5 Kgs	18 Kgs	20 Kgs
G.W.:	15 Kgs	18.5 Kgs	20 Kgs	22 Kgs
Package Size:	850x460x160 mm	1030x570x180 mm	1030x550x180 mm	1030x570x180 mm
QTY/20'CY:	408 Pcs	286 Pcs	286 Pcs	286 Pcs

Model:	TRG70L-2
N.W.:	18 kgs
G.W.:	19.5 kgs
Package Size:	720x190x1120 mm
QTY/20'CY:	188 PCS

Plastic Oil Drain

Model:	TRG4026
Tank capacity:	100 L
Min.Height:	1380 mm
Max.Height:	1994 mm
N.W.:	29.5 kgs
G.W.:	31.5 kgs
package Size:	550x540x985 mm
QTY/20':	75 PCS

TRG4026
100 L

Pneumatic Oil Drains

Model	Product Size	Package Size	N.W.	G.W.	QTY20"CY
TRG2018	640x570x525 mm	440x420x960 mm	22 kgs	24 kgs	160 PCS
TRG2020	730x425x540 mm	750x430x540 mm	22 kgs	24 kgs	170 PCS

Oil drain tank for collecting all kinds of trashy oil from Auto,agriculture mechanism,etc...
Height & direction adjustable for the oiltray.
Highest air pressure: 0.8 bar

TRG2018
18 Gallon

TRG2020
20 Gallon

Pneumatic Oil Drains

TRG2094
28 Gallon

TRG2030
30 Gallon

Model	Product Size	Package Size	N.W.	G.W.	QTY20"CY
TRG2094	540x550x960 mm	540x520x1000mm	22 kgs	25 kgs	100 PCS
TRG2030	650x450x1200 mm	520x500x1040mm	36 kgs	39 kgs	110 PCS

Pneumatic Oil Extractors

Total Volume: 90L
Equiped with a tool plate.
In order to get the best working condition, we recommend draining below 70-80 degree.
Capacity of suction 1.5-2ltr/min
Max Deprassion: 0.5 bar
Extraction Hose: 2000 mm
Caution:Forbid any caustic product.

TRG2093
90 L

Model	Product Size	Package Size	N.W.	G.W.	QTY20"CY
TRG2090	545x510x970 mm	1#540x520x1000 m 2#250x250x700 mm	1# 35kgs 2# 5 kgs	1# 39 kgs 2# 6 kgs	90 PCS
TRG2091	545x510x910 mm	1#540x520x970 mm 2#250x250x700 mm	1# 22 kgs 2# 5 kgs	1# 26 kgs 2# 6 kgs	105 PCS
TRG2092	545x510x970 mm	540x520x1000 mm	27 kgs	31 kgs	70 PCS
TRG2093	545x510x910 mm	540x520x970 mm	24 kgs	28 kgs	105 PCS

Pneumatic Oil Extractors

Total Volume: 90L
Equiped with a tool plate.
In order to get the best working condition, we recommend draining below 70-80 degree.
Capacity of suction 1.5-2ltr/min
Max Deprassion: 0.5 bar
Extraction Hose: 2000 mm
Caution:Forbid any caustic product.

TRG2092 **90 L Tank**

TRG2091 **90 L**

TRG2090 **90 L**

GRASE INJECTOR

12L Manual GRASE INJECTOR
"Grease output:0.005 kg / one stroke
outlet Pressure:200-250 BAR, 2900-3625 PSI
Barrel Capacity:12 L"

TRH12M-A
12 L

25L ManualGREASE INJECTOR
"Grease output:0.005 kg / one stroke
Outlet Pressure:200-250 BAR 2900-3625PSI
Barrel capacity:25 L"

TRH25M
25 L

Model	Min.Qty (Sets)	Body Treatment	Packing	Qty/CTN (PC)	Meas(mm)	G.W./N.W (Kgs)	Qty/20'FT (PCS)
TRH12M-A	100	Power Coating	Brown Carton	1	370x280x550	7.0 / 6.0	490
TRH25M	100	Power Coating	Brown Carton	1	410x410x720	9.0 / 8.0	367

AIR TIRE INFLATING GUN

TRG-1A

AIR TIRE INFLATING GUN
"Recommended working pressure:0-8bar
WORKING PRESSURE:0-12BAR
PRESSURE GAUGE RANGE:0-12BAR
Length of rubber hose: 44 cm"

TRG-1B

AIR DIGITAL TIRE INFLATING GUN
"Recommended working pressure:0-4bar
working pressure:0-12bar
air inlet:1/4""
Length of rubber hose: 44 cm"

TRG18A

AIR TIRE INFLATING GUN
"Recommended working pressure:0-4 bar
working pressure:0-12 bar
air inlet:1/4""
Length of rubber hose: 44 cm"

TRG18D

Model	Min.Qty (Sets)	Body Treatment	Packing	Qty/CTN (PC)	Meas(mm)	G.W./N.W (Kgs)	Qty/20'FT (PCS)
TRG-1A	1000	Power Coating	Slide Blister Card	40	680x380x330	18.0 / 16.0	13130
TRG-1B	1000	Power Coating	Slide Blister Card	40	680x380x330	18.0 / 16.0	13130
TRG18A	500	PA 6 body	Double Blister	20	415X380X370	14.0 / 12.0	9560
TRG18D	500	PA 6 body	Double Blister	20	415X380X370	14.0 / 12.0	9560

High Pressure Grease Injector

12L HIGH PRESSURE GREASE INJECTOR
Air Hose: 4 m x 6 mm x16 mm high pressure【6000PSI】;
Barrel size:324xΦ222mm
with regulator;
with 2 wheels, lid- installed handle;
Compression Ratio:50:1;
Air Pressure (Mpa):0.6～0.8;
Grease Delivery(L/Min):0.85;
Outlet Pressure (Mpa):30～40;"

TRH12
12 L

20L HIGH PRESSURE GREASE INJECTOR
Air Hose: 4 m x 6 mm x16 mm high pressure【6000PSI】;
Barrel size:350xΦ286 mm
with regulator;
with 4 wheels, lid- installed handle;
Compression Ratio:50:1;
Air Pressure (Mpa):0.6～0.8;
Grease Delivery(L/Min):0.85;
Outlet Pressure (Mpa):30～40;"

TRH20
20 L

30L HIGH PRESSURE GREASE INJECTOR
Air Hose: 4 m x 6 mm x16 mm high pressure【6000PSI】;
Barrel size:430xΦ315mm
with regulator;
with4 wheels, lid- installed handle;
Compression Ratio:50:1;
Air Pressure (Mpa):0.6～0.8;
Grease Delivery(L/Min):0.85;
Outlet Pressure (Mpa):30～40;"

TRH30
30 L

45L HIGH PRESSURE GREASE INJECTOR
Air Hose: 4 m x 6 mm x16 mm high pressure【6000PSI】;
Barrel size:430xΦ355 mm
with regulator;with 4 wheels, lid- installed handle;
Compression Ratio:50:1; Air Pressure (Mpa):0.6～0.8;
Grease Delivery(L/Min):0.85; Outlet Pressure (Mpa):30～40;"

TRH45
45L

GRASE INJECTOR

12L Manual GRASE INJECTOR
"Grease output:0.005kg/one stroke
outlet Pressure:200-250BAR, 2900-3625PSI
Barrel Capacity:12L"

TRH-12M
12 L

TRH12F
12 L

Model	Body Treatment	Packing	Meas(mm)	G.W./N.W (Kgs)	Qty/CTN (PC)	Qty/20'FT (PCS)	MOQ (Pcs)
TRH12	Power Coating	Brown Carton	320x360x840	14.0 / 13.5	1	289	100
TRH20	Power Coating	Brown Carton	360x340x760	14.0 / 13.0	1	300	100
TRH30	Power Coating	Brown Carton	365x365x840	16.0 / 15.0	1	250	100
TRH45	Power Coating	Brown Carton	400x400x840	17.5 / 16.5	1	208	100
TRH-12M	Power Coating	Brown Carton	370x280x630	7.0 / 6.0	1	430	100
TRH12F	Power Coating	Brown Carton	400x360x530	11.0 / 12.0	1	368	100

Vertical Jerrican

TRYG-L5
5 L

TRYG-L10
10 L

TRYG-L20
20 L

Model	Thickness (mm)	Product size(mm)			N.W. (kgs)	G.W. (kgs)	Package Size (mm)	Pcs/ Ctn	MOQ (pcs)
		L	W	H					
TRYG-L5	0.6	243	116	313	9.60	11.05	495x485x315	8	200
TRYG-L10	0.8	304	131	396	12.25	13.00	650x310x420	5	200
TRYG-L20	0.8	369	160	467	14.40	15.70	655x355x480	4	200

Horizontal Jerrican

TRYG-W5
5 L

TRYG-W10
10 L

TRYG-W20
20 L

Model	Thickness (mm)	Product size(mm)			N.W. (kgs)	G.W. (kgs)	Package Size (mm)	Pcs/ Ctn	MOQ (pcs)
		L	W	H					
TRYG-W5	0.8	400	246	122.5	13.60	18.25	530x420x655	8	200
TRYG-W10	0.8	395	245	187	13.20	16.20	530x415x630	6	200
TRYG-W20	0.8	428	304	258	11.80	14.80	640x445x566	4	200

Car Creeper

TR6453 36"

TR6451 36"

TR6454A 36"
Foldable

TR6503 40"

Adjust
35°

TR6452 40"

TR6455 40"

Model	TR6453	TR6451	TR6454A	TR6503	TR6452	TR6455
N.W.:	5.76 kgs	6.14 kgs	6.3 kgs	7.4 kgs	7.2 kgs	6.8 kgs
G.W.:	6.58 kgs	6.94 kgs	7.0 kgs	8.4 kgs	8.35 kgs	7.7 kgs
Overall Size:	920x425x95 mm	920x425x95 mm	901x425x120 mm	1025x420x125 mm	1025x425x110 mm	1025x425x105 mm
Package Size:	935x450x110 mm	935x450x100 mm	485x465x165 mm	1040x440x90 mm	1050x440x130 mm	1060x450x120 mm
QTY/20'CY:	640 PCS	630 PCS	780 PCS	780 PCS	459 PCS	490 PCS

Plastic Car Creeper

TRH6802-1 40"

TRH6803 36"

TRH6802-2 40"

TRH6803B 36"

TRH6802-3 40"

Patent No.:
ZL201220005508.7

Model	TRH6803	TRH6803B	TRH6802-1	TRH6802-2	TRH6802-3
N.W.:	3.45 kgs	3.83 kgs	4.98 kgs	5 kgs	5.29 kgs
G.W.:	4.25 kgs	4.63 kgs	5.95 kgs	6 kgs	6.26 kgs
Overall Size:	900x400x100 mm	900x400x100 mm	1010x475x130 mm	1010x475x130 mm	1010x475x130 mm
Package Size:	930x420x80 mm	930x420x80 mm	1050x490x95 mm	1050x490x95 mm	1050x490x95 mm
QTY/20'CY:	928 PCS	928 PCS	550 PCS	550 PCS	550 PCS

Bar Stool

SWIVEL 360°

Pneumatic

TR6188C

U.S. Patent No.:
USD579,677S

Model	TR6188C	TR6185-1
Overall Size:	483x483x685 mm	515x515x730 mm
Tube Dia.:	Ø 32	Ø 25
Adjust Height:	115 mm	/
N.W.:	6.9 kgs	5.0 kgs
G.W.:	8.4 kgs	5.76 kgs
Package Size:	420x420x440 mm	680x510x90 mm
QTY/20' CY:	320 PCS	825 PCS

TR6185-1

Heavy Duty Creeper Seat

- *Heacy Duty Polished Chrome Frame.*
- *High Density Foam Seat.*
- *Ball Bearing Swivel Casters.*
- *Easy Access Storage Tray.*

Extra Heavy Duty Steel Tube

Detachable Cup Holder

Oversized Swivel Casters

Pneumatic

TR6208
Chrome Plated Tray

TR6340

U.S. Patent No.:
USD579,679S

Creeper Seat

Model	TR6208	TR6340	TR6100	TR6301	TR6301A
N.W.:	8.0 kgs	9.56 kgs	4.18 kgs	4.6 kgs	4.85 kgs
G.W.:	8.62 kgs	10.30 kgs	4.7 kgs	5.3 kgs	5.45 kgs
Overall Size:	445x445x450 mm	400x450x400 mm	364x365x365 mm	397x372x360 mm	400x367x383 mm
Package Size:	460x175x460mm	450x265x270mm	380x145x395mm	375x240x450mm	410x390x260mm
QTY/20'CY:	800 PCS	840 PCS	1374 PCS	675 PCS	560 PCS

TR6100

TR6301

TR6301A

Creeper Seat

Pneumatic

TR6201

Lifting Range **120mm**

Lifting Range **120mm**

Pneumatic

TR6201CX

Lifting Range **115mm**

Pneumatic

TR6201J

Additional Tool Tray

Lifting Range **120mm**

Pneumatic

TR6375E

Lifting Range **120 mm**

Pneumatic

TR6360B

Additional Tool Tray

Model	TR6201	TR6201CX
N.W.:	5.6 kgs	5.55 kgs
G.W.:	6.1 kgs	6.25 kgs
Overall Size:	380x380x440 mm	380x380x425 mm
Package Size:	410x405x170mm	405x405x180mm
QTY/20'CY:	1120 PCS	840 PCS

Model	TR6201J	TR6375E	TR6360B
N.W.:	6.16 kgs	8.82 kgs	5.1 kgs
G.W.:	6.82 kgs	9.78 kgs	5.84 kgs
Overall Size:	380x380x440 mm	480x430x630 mm	435x380x400 mm
Package Size:	405x405x180 mm	500x255x510 mm	460x390x200 mm
QTY/20'CY:	840 PCS	450 PCS	748 PCS

Cable Puller

Multi-purpose tool: lifting, lowering, pulling, stretching.
Use anywhere: farming, gardening, machine shop, camping, boating, traveling, hobby shop, trucking, fencing, hunting, sports.

Model	TRK8020	TR8021CR	TRK8041CR	TRK8021	TRK8041	TRK8021L	TRK8041L
Tractor Capacity:	2 Ton	2 Ton	4 Ton	2 Ton	4 Ton	2 Ton	4 Ton
Steel Cable Diameter:	Ø 4.8 mm	Ø 4.8 mm	Ø 5.5 mm	Ø 4.8 mm	Ø 4 mm	Ø 4.8 mm	Ø 5.5 mm
Steel Cable Length:	2.8 m	2.8 m	3 m	2.8 m	3 m	3 m	3.3 m
Package Size (mm):	605x315x180	590x260x220	710x210x290	605x315x180	710x280x210	645x305x250	755x250x165
N.W./G.W. (kgs):	2.3 / 2.7	2.6 / 2.9	5.35 / 5.95	2.9 / 3.05	5 / 5.5	3.2 / 3.5	5.75 / 6.75
QTY/CTN:	6 PCS	6 PCS	4 PCS	6 PCS	4 PCS	6 PCS	2 PCS
QTY/20' CY :	5160 PCS	5040 PCS	2560 PCS	5160 PCS	2560 PCS	3360 PCS	1400 PCS

Wire Rope Pulling Hoist

TRT0800 800 kgs
TRT1600 1600 kgs
TRT3200 3200 kgs
TRT5400 5400 kgs

Model	TRT0800	TRT1600	TRT3200	TRT5400
Rated forward handpower(N)	341	400	438	850
Rated capacity(kgs)	800	1600	3200	5400
Rope diameter (mm)	8.3	11	16	20
Rope size (m)	20	20	20	20
Max travelling load (kgs)	1200	2400	4000	8100
N.W. (kgs)	6.4	12	23	58
G.W. (kgs)	15.3	27	50.8	100
Max outer size (LxHxD mm)	426x238x64	545x284x97	660x325x116	930x390x150
Package size (mm)	960x760x790	1040x770x640	1060x770x610	1100x1100x720
QTY/CTN (PCS)	20	10	5	4
QTY/20'CY (PCS)	960	504	252	120

Electric Winch

TRH92000
2000 LBS

TRH92500
2500 LBS

TRH96000-1
6000 LBS

TRH98000
8000 LBS

TRH99500-1
9500 LBS

Model	Capacity (lbs)	N.W. (kgs)	G.W. (kgs)	Package Size (mm)	QTY/20'CY (PCS)
TRH92000	2000	6	6.5	325x230x180	2000
TRH92500	2500	7.5	8.1	340x290x170	1600
TRH96000-1	6000	25	26	520x340x250	600
TRH98000	8000	33.8	34.85	600x340x250	540
TRH99500-1	9500	33	34	600x340x250	540

Electric Handy Winch

Model: TRC9202
Capacity: 2000 LBS
N.W.: 8 kgs
G.W.: 9 kgs
Package Size:
315x260x225 mm
QTY/20'CY : 1200 PCS

TRC9202
2000 LBS

Model	TRT1061C	TRT1101C	TRT1161C	TRT1201C	TRT1301C
Capacity	600 LBS	1000 LBS	1600 LBS	2000 LBS	3000 LBS
N.W. / G.W.(kgs):	13 / 15	18.5 / 20.5	16.5 / 18.5	20.5 / 22.5	02.5 / 22.5
Package Size(mm):	590x260x160	660x270x180	460x310x200	520x310x200	540x310x220
QTY/CTN:	6 PCS	6 PCS	4 PCS	4 PCS	4 PCS
QTY/20'CY:	1050 PCS	800 PCS	900 PCS	800 PCS	700 PCS

Model	TRT1061S	TRT1101S	TRT1161S	TRT1201S	TRT1301S
Capacity	600 LBS	1000 LBS	1600 LBS	2000 LBS	3000 LBS
N.W. / G.W.(kgs):	11.5 / 13.5	16.5 / 18.5	14 / 16	18 / 20	20.5 / 22.5
Package Size(mm):	590x260x160	660x270x180	460x310x200	520x310x200	540x310x220
QTY/CTN:	6 PCS	6 PCS	4 PCS	4 PCS	4 PCS
QTY/20'CY:	1050 PCS	500 PCS	900 PCS	800 PCS	700 PCS

Hand Winch

Steel Cable

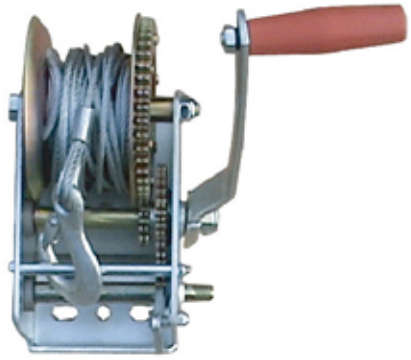

TRT1060C 600 LBS
TRT1101C 1000 LBS
TRT1161C 1600 LBS
TRT1201C 2000 LBS
TRT1301C 3000 LBS

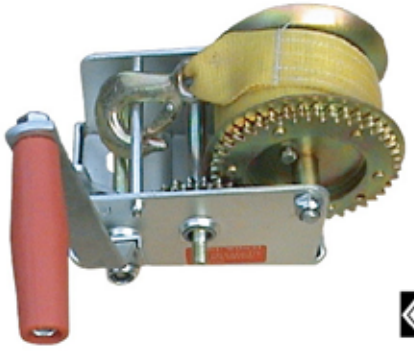

Nylon Belt

TRT1060S 600 LBS
TRT1101S 1000 LBS
TRT1161S 1600 LBS
TRT1201S 2000 LBS
TRT1301S 3000 LBS

Chain Block

TRC9005
0.5 Ton
TRC9010
1 Ton
TRC9015
1.5 Ton

TRC9020
2 Ton

TRC9030
3 Ton

TRC9050
5 Ton

TRC9100
10 Ton

Model	Capacity (Ton)	Lift Height (m)	Headroom (Hook to Hook) (mm)	Chainpull to Lift Full Load	No. of Load Chain	N.W. / G.W. (kgs)	Package Meas. (L x W x H) (mm)	QTY/20'CY (PCS)
TRC9005(HS0.5)	0.5	2.5	240	260N	1	8.7 / 8.9	250x180x140	1910
TRC9010(HS1)	1	2.5	300	330N	1	9.1 / 9.3	250x180x140	1875
TRC9015(HS1.5)	1.5	2.5	360	370N	1	15.1 / 15.5	300x220x160	1200
TRC9020(HS2)	2	2.5	380	330N	2	12.3 / 12.6	280x190x140	1417
TRC9030(HS3)	3	3	470	390N	2	21.5 / 22	310x220x160	807
TRC9050(HS5)	5	3	600	420N	2	35 / 35.5	390x270x200	500
TRC9100(HS10)	10	3	730	450N	4	65 / 70	580x430x250	236

Chain Block

TRC9005S
0.5 Ton

TRC9010S
1 Ton

TRC9020S
2 Ton

Patent Design
Heavy Duty Plastic Case

Model	Capacity (Ton)	Length of Chain (m)	N.W. / G.W. (kgs)	Package Size (mm)	QTY/20'CY (PCS)
TRC9005S	0.5	2.5	8.7 / 9.6	370x155x250	1800
TRC9010S	1	3	9.8 / 10.7	370x155x250	1800
TRC9020S	2	3	13.2 / 14.1	370x155x250	1400

Chain Trolley

Model	Capacity (Ton)	Length of Chain (m)	N.W. / G.W. (kgs)	Package Size (mm)	QTY/20'CY (PCS)
TRC9405	0.5	3	10 / 10.5	280x200x160	1628
TRC9410	1	3	10.5 / 11	300x230x200	1368
TRC9420	2	3	15.5 / 16	320x270x220	900
TRC9430	3	3	22 / 22.5	335x310x260	633
TRC9450	5	3	37 / 42	390x340x300	633
TRC9500	10	3	78.5 / 89	480x440x410	202

Chain Block

TRC90051
0.5 Ton

TRC90101
1 Ton

TRC90151
1.5 Ton

TRC90201
2 Ton
Double chain

TRC90301
3 Ton
Double chain

TRC90501
5 Ton
Double chain

TRC91001
10 Ton
Double chain

Model	Capacity (Ton)	Lift Height (m)	Headroom (Hook to Hook) (mm)	Chainpull to Lift Full Load	No. of Load Chain	N.W. / G.W. (kgs)	Package Meas. (L x W x H) (mm)	QTY/20'CY (PCS)
TRC90051(HS0.5)	0.5	2.5	295	260N	1	7 / 7.3	240x170x130	2400
TRC90101(HS1)	1	2.5	330	323N	1	9.8 / 10	250x180x140	1800
TRC90151(HS1.5)	1.5	2.5	410	395N	1	18 /18.5	360x205x150	950
TRC90201(HS2)	2	3	430	346N	2	15.2 / 15.6	290x200x150	1100
TRC90301(HS3)	3	3	530	390N	2	21 / 21.5	360x205x160	790
TRC90501(HS5)	5	3	588	505N	2	37 / 38	480x245x185	460
TRC91001(HS10)	10	3	700	520N	4	68 / 84	160x480x260(wood)	250

Double Lever Block

TRC7005 **0.5 Ton**

TRC7075 **0.75 Ton**
TRC7010 **1 Ton**

TRC7015 **1.5 Ton**
TRC7020 **2 Ton**

TRC7030 **3 Ton**

TRC7062 **6 Ton**

Model	Capacity (Ton)	Lift Height (m)	N.W. / G.W. (kgs)	Package Meas. (L x W x H) (mm)	QTY/20'CY (PCS)
TRC7005(HSHY0.5)	0.5	1.5	3.8 / 4	350x100x130	4186
TRC7075(HSHY0.75)	0.75	1.5	6.4 / 6.8	360x140x170	2340
TRC7010(HSHY1)	1	1.5	6.6 / 7	360x140x170	2340
TRC7015(HSHY1.5)	1.5	1.5	10.1 / 10.5	470x140x190	1520
TRC7020(HSHY2)	2	1.5	10.3 / 10.7	470x140x190	1520
TRC7030(HSHY3)	3	1.5	17.5 / 18	485x180x210	910
TRC7062(HSHY6)	6	1.5	26 / 27	560x250x220	645

Electric Chain Hoist

- Ideal for lifting heavy materials with minimum power.
- Triple spur gear.
- Safety hooks included.
- Safety brake prevents slipping.

Model	Method of use	Capacity (kgs)	Rated Volt (V)	Input Power (W)	Rated Lifting Weight (kgs)	Lifting Speed (m/min)	Lifting Height (m)	Package Size (cm)	G.W./N.W. (kgs)	QTY/CTN (PCS)	QTY/20'CY (PCS)
TRH1002	Single-hook	100	220 / 230	510	100	10	12	36.5x14.5x21	13 / 12.5	2	1900
	Doule-hook	200			200	5	6				
TRH1025	Single-hook	125	220 / 231	550	125	10	12	36.5x14.5x21	14 / 13	2	1700
	Doule-hook	250			250	5	6				
TRH1003	Single-hook	150	220 / 232	600	150	10	12	36.5x14.5x21	15 / 14	2	1600
	Doule-hook	300			300	5	6				
TRH1004	Single-hook	200	220 / 233	850	200	10	12	42x16x24	17.5 / 17	2	1400
	Doule-hook	400			400	5	6				
TRH1005	Single-hook	250	220 / 234	1000	250	10	12	42x16x24	18 / 17.5	2	1350
	Doule-hook	500			500	5	6				
TRH1006	Single-hook	300	220 / 235	1150	300	10	12	42x16x24	19 / 18	2	1300
	Doule-hook	600			600	5	6				
TRH1007	Single-hook	350	220 / 236	1450	350	10	12	42x16x24	20 /1 9	2	1200
	Doule-hook	700			700	5	6				
TRH1008	Single-hook	400	220 / 237	1450	400	10	12	42x16x24	20 /1 9	2	1200
	Doule-hook	800			800	5	6				
TRH1000	Single-hook	500	220 / 238	1800	500	8	12	56.5x24.5x32.5	34 / 32.5	1	700
	Doule-hook	1000			1000	4	6				
TRH1200	Single-hook	600	220 / 239	1800	600	8	12	56.5x24.5x32.5	34 / 32.5	1	700
	Doule-hook	1200			1200	4	6				

Electric Chain Hoist

Shell: Light aluminum alloy shell shall be adopted wich is light but hard and fit for the use in the terrible work environment with a high heat dissipation rate and all tightness design.
Inverse phase sequence protecting device:It is the special electrical installation which control the circuit not to work in case of wiring error in the power supply.
Limit switch: The limit switch device is installed where the weight is lifted on and off to make the motor to stop automatically so as to prohibit the chains from exceeding for safety.
24V/36V decice: It is used to prohibit the emergencies from occurring in case of the leakage in the switch.
Side magnetic braking device: This device shall realize the instant brake in case of the power dump.
Chain bag: It shall be light, handsome and durable.
Chain: The chain shall adopt the imported FEC80 ultra heat-treatable Alloy steel chain.

TRC9E0051B
0.5 Ton
TRC9E0101B
1 Ton
TRC9E0201B
2 Ton

TRC9E0301B
3 Ton

TRC9E0501B
5 Ton

TRC9E1001B
10Ton

Type	Capacity (Ton)	Lifting Height (m)	Lifting Speed (m/min)	Lifting Motor					I-Beam (mm)	N.W./G.W. (kgs)	Package size (mm)	QTY/20'CY (PCS)
				Power (Kw)	Rotation Speed (r/min)	Phases	Voltage (V)	Frequency (Hz/s)				
TRC9E0051B	0.5	3	6.8	0.8	1440	3	220/440	50/60	58-127	30/35	400x380x350	200
TRC9E0101B	1	3	6.6	1.5	1440	3	220/440	50/60	68-130	61/68	600x350x530	150
TRC9E0201B	2	3	6.6	3.0	1440	3	220/440	50/60	82-153	115/124	700x440x600	140
TRC9E0301B	3	3	5.4	3.0	1440	3	220/440	50/60	82-153	131/142	700x440x600	125
TRC9E0501B	5	3	2.7	3.0	1440	3	220/440	50/60	100-178	151/162	700x440x600	80
TRC9E1001B	10	3	2.7	3.0x2	1440	3	220/440	50/60	150-220	300/330	950x700x860	36

Moving Trolley

Type	Capacity (Ton)	Speed 50Hz (m/min)	Motor (Kw)	Minimum radius of ture	QTY/20'CY (PCS)
TRC9E0052	0.5	212.2 / 24	0.12	0.8	230
TRC9E0102	1	11 / 21	0.4	0.8	160
TRC9E0202	2	11 / 21	0.4	0.8	150
TRC9E0302	3	11 / 21	0.75	1.0	140
TRC9E0502	5	11 / 21	0.75	1.8	90
TRC9E0752	7.5	11 / 21	0.75	2.5 (3.0)	80
TRC9E1002	10	11 / 21	0.75	2.5 (3.0)	70

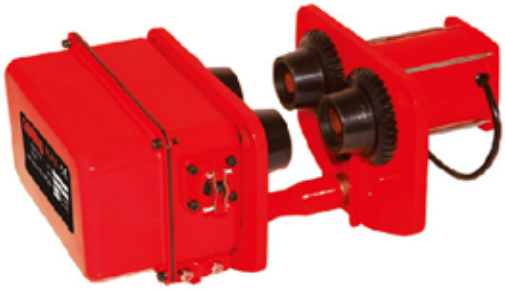

Vehicle Bike Rack

TRF2590B-F
Model: TRF2590B-F
Package Size: 720x430x230 mm
N.W.: 4.5 kgs
G.W.: 4.7 kgs
QTY/CTN: 4 PCS
QTY/20'CY: 1500 PCS

Double Safety Lock

Model: TRF2590
Product Size(WxDxH): 590x270x720 mm
Package: 100x260x170 mm
N.W.: 3 kgs
G.W.: 3.5 kgs
QTY/CTN: 6 PCS
QTY/20'CY: 4320 PCS

TRF2590

Bike Carrier

TRF2594
Model: TRF2594
Package Size: 800x580x120 mm
N.W.: 4 kgs
G.W.: 5 kgs
QTY/20'CY: 500 PCS

Model: TRF2599
Package Size:
780x385x190 mm
N.W.: 5.8 kgs
G.W.: 6.8 kgs
QTY/20'CY: 480 PCS

TRF2599

TRF2598

Model: TRF2598
Package Size:780x385x190 mm
N.W.: 5.3 kgs
G.W.: 6.3 kgs
QTY/20'CY: 480 PCS

Hanging Bike Rack

Steel construction bicycle lift with unique pulley locking mechanism system easily lifts a bike up and away for easy storage.
Saves space and protects tires.
46ft. PP rope and mounting hardware included.
Lifts up to 20kg.

TRF2571
Model: TRF2571
Overall Size: 530x270x275 mm
Package Size: 995x275x155 mm
N.W.: 1.8 kgs/PC
G.W.:1.9 kgs/PC
QTY/CTN: 10 PCS
QTY/20'CY: 7100 PCS

Universal Dog Guard

TRDR002
Package Size:
950x345x305 mm
N.W.: 4 kgs
G.W.: 4.5 kgs
QTY/CTN: 4 PCS
QTY/20'CY: 1100 PCS

TRDR003
Package Size:
885x295x195 mm
N.W.: 3 kgs
G.W.: 4 kgs
QTY/CTN: 4 PCS
QTY/20'CY: 2200 PCS

- *Height and width adjustable to fit most vehicles*
- *EAsy installation and removal*
- *Durable steel construction*

TRDR005-B
Package Size:
950x310x450 mm
N.W.: 3 kgs
G.W.: 4 kgs
QTY/CTN: 6 PCS
QTY/20'CY: 1260 PCS

Aluminum Folding Work Step

TRT3001-1
200 kgs

ALUMINUM

Capacity: 200 kgs
N.W.: 8.2 kgs
G.W.: 9.5 kgs
Package Size: 1020x385x185 mm
QTY/CTN: 1 PC
QTY/20'CY: 350 PCS

Auto Detailing

Household or shop projects

Coat Hanger

Suitable for suits, jackets, overcoat,...etc.
For traveling business people on the move.
Can be fitted to any head rest measuring 16mm or less.
Made of chrome-plated steel.

TRQ20051
Width: 49 cm
Package Size:
1020x285x500 mm
N.W.: 0.75 kgs
G.W.: 0.9 kgs
QTY/CTN: 20 PCS
QTY/20'CY: 3800 PCS

TRQ20052
Package Size:
485x180x55 mm
N.W.: 0.19 kgs
G.W.: 0.4 kgs
QTY/20'CY: 3800 PCS

Floor-Mounted Bike Stand

Quickly store 2 bikes with ease, bikes can be stored in the same or alternate directions.
Easy for children to use.
Tubular steel construction.
Model: TRX6981
Size: 440x310x390 mm
N.W.: 4.5 kgs
G.W.: 5 kgs
QTY/CTN: 4 PCS
QTY/20'CY: 1500 PCS

TRX6981

Quickly store 4 bikes with ease, bikes can be stored in the same or alternate directions.
Easy for children to use.
Tubular steel construction.
Model:TRX6982
Size: 590x350x260 mm
N.W.: 5.5 kgs
G.W.: 6 kgs
QTY/CTN: 2 PCS
QTY/20'CY: 1000 PCS

TRX6982

Paper Towel Stand

TRM4901
N.W.: 2.25 kgs
G.W.: 2.8 kgs
Package Size:
840x710x430 mm
QTY/CTN:10 PCS
QTY/20'CY: 950 PCS

TRM4902
N.W.: 1.5 kgs
G.W.: 1.6 kgs
Package Size:
270x240x360 mm
QTY/20'CY: 1000 PCS

Tire Rack

TAZ8253
Package Size: 712x724x76 mm
N.W.:15.3 kgs
G.W.:16.7 kgs
QTY/20'CY: 750 PCS

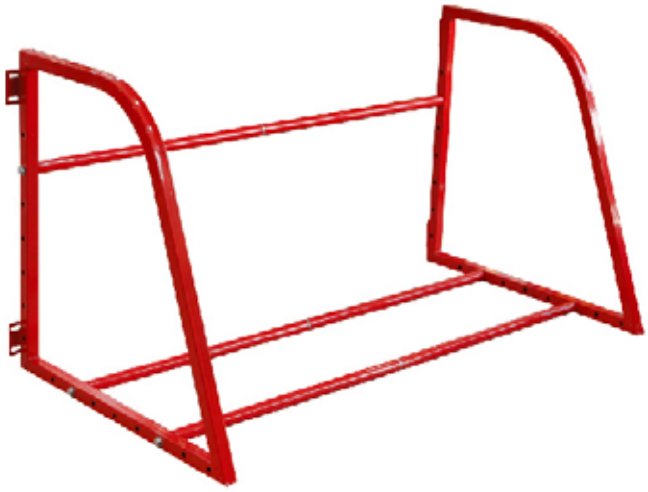

- For holding max. 4 wheels.
- Suit for wheels up to 225mm.
- Capacity up to 100 kgs.
- Easy assembled.

TRF8401
Package Size: 545x315x485 mm
N.W.: 2.2 kgs
G.W.: 2.8 kgs
QTY/CTN: 10 PCS
QTY/20'CY: 3500 PCS

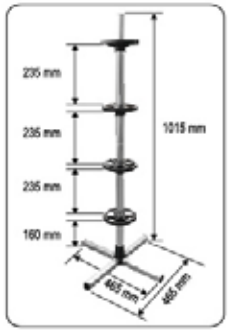

Polyester Cover
(Option)

Wheel Step

Tire stepping for professional use automotive tools, there are two purposes: firstly, to increase the height of the installation of the roof support equipment to the roof, the second is for large SUV engine compartment operation easy reach inside. More convenient when working on are taller vehicle. Can be installed on the front and rear tires.

TTC02
Package Size: 600x430x120mm
N.W. / G.W.: 5 / 5.5kgs
QTY/CTN: 1 PC
QTY/20'CY: 900 PCS
MOQ: 100 PCS

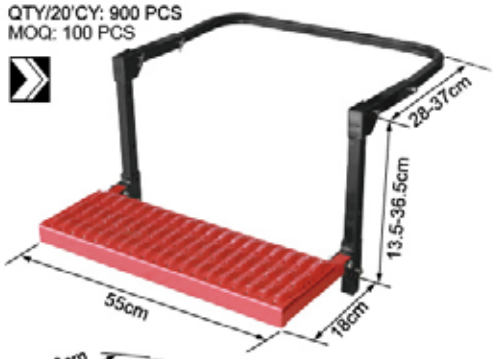

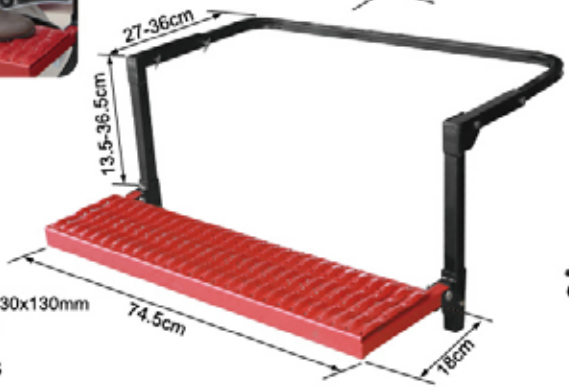

TTC03
Package Size: 790x430x130mm
N.W. / G.W.: 6 / 7kgs
QTY/CTN: 1 PC
QTY/20'CY: 600 PCS
MOQ: 100 PCS

TRF8402
Package Size:
545x315x485 mm
N.W.: 2.6 kgs
G.W.: 3 kgs
QTY/CTN: 10 PCS
QTY/20'CY: 3500 PCS

Polyester Cover
(Option)

Brake
Wheel

Foot Pump

TRF892-C

Model	TRF892-C
Size:	Φ55X100 mm
N.W.:	15 kgs / CTN
G.W.:	16 kgs / CTN
QTY/CTN:	20 PCS
Package Size:	390x260x370 mm
QTY/20CY:	10000 PCS
MOQ:	1500 PCS

TRF957-C

Model	TRF957-C
Size:	Φ55X120 mm
N.W.:	27 kgs / CTN
G.W.:	28 kgs / CTN
QTY/CTN:	25 PCS
Package Size:	415x300x465 mm
QTY/20CY:	11000 PCS
MOQ:	1500 PCS

TRF969-B

Model:	TRF969-B
Size:	Φ55X100 mm
N.W.:	19 kgs / CTN
G.W.:	20 kgs / CTN
QTY/CTN:	15PCS
Package Size:	380x260x460 mm
QTY/20CY:	5000 PCS
MOQ:	1500 PCS

Heavy Duty Air Compressor

Model: TRTH20C
Power supply:12V,Rated current:10A
Max pressure:140PSI
Cylinder diammeter:30mm,
Max.air flow:35L/Min
Duration working time:15minutes
Package Size:400x260x360mm
8 PCS/CTN:13.5kgs
QTY/20'CY: 6000 PCS
MOQ:50 PCS

TRTH20C

Model: TRTH20A
Power supply: DC 12V
Max.pressure: 150 PSI
Max.air flow: 35 L/Min
7.5 M air hose(PU) with a 150 PSI high-quality pressure gauge
Duration working time: 15 minutes
With thermal overload protector
3 PCS nozzle adapters
Package Size:170x90x160 mm
Carton Size: 540x330x365 mm
4 PCS/CTN: 14 kgs
QTY/20'CY: 1752 PCS
MOQ:50 PCS

TRTH20A

Heavy Duty Air Compressor

Model: TRTH30A
Power supply:DC12V, max rated curent:23A
Max pressure:150PSI
Cylinder diammeter:30mm,
Max.air flow:45L/min
Duration working time:15minutes
Package Size:550x340x430mm
8 PCS/CTN:21kgs
QTY/20'CY: 2800 PCS
MOQ:50 PCS

TRTH30A

Aluminum Loading Ramp

TRF4501
200 kgs/pc

Load Capacity: 200 kgs/pc
Demensions: 1795x293x60 mm
Package Size: 950x315x170 mm
N.W.: 7 kgs
G.W.: 8 kgs
QTY/20'CY: 588 PCS

ALUMINUM

ATV Loading Ramp

ATV Loading Ramp provides you with a way to easily load and unload your ATV and power equipment in and out of the back of a pickup truck. These ramps make transporting your ATV a simple task and a non-skid surface ensures safety in all conditions.

Length: 2160 mm
Folded Length: 1110 mm
Width: 280 mm
Load Capacity: 340 kgs/pc
N.W.: 6.5 kgs
G.W.: 7 kgs
Package Size: 1130x290x300 mm
QTY/CTN: 2 PCS
QTY/20'CY: 560 PCS

ALUMINUM

TRT7501
340 kgs/pc

ATV Loading Ramp

ATV Loading Ramp provides you with a way to easily load and unload your ATV and power equipment in and out of the back of a pickup truck. These ramps make transporting your ATV a simple task and a non-skid surface ensures safety in all conditions.

Length: 2260 mm
Folded Length: 1160 mm
Width: 295 mm
Load Capacity: 340 kgs/pc
N.W.: 7.2 kgs
G.W.: 8.2 kgs
Package Size : 1170x300x310 mm
QTY/CTN: 2 PCS
QTY/20'CY: 560 PCS

ALUMINUM

TRT7502
340 kgs/pc

UTV Loading Ramps

ALUMINUM

TRT40001
1400 kgs/pc

Load capacity: 2800 kgs/pair
Length: 2490mm
Windth: 305mm
Thickness: 110mm
N.W.: 19 kgs/pair
G.W.: 20 kgs/pair
Packaging Size: 2520x310x130 mm
QTY/20'CY: 245 Sets

Triple Folding Ramp

This is the most portable and compact ramp available.
It folds quickly and easily, it is very suitable for ATV to go up and down.

Length: 1990 mm
Folded Length: 720 mm
Width: 300 mm
Load Capacity: 270 kgs/pc
N.W.: 7 kgs
G.W.: 8 kgs
Package Size: 370x315x730 mm
QTY/CTN: 2 PCS
QTY/20' CY: 672 PCS

ALUMINUM

TRT07508
270 kgs/pc

Vehicle Ramps

TD2001G

2 TON

Capacity: 2 Ton/pair
Max. Tyre Width: 210 mm
Package Size: 865x320x910 mm
N.W.: 5.6 kgs
G.W.: 6 kgs
QTY/CTN: 10 PCS
QTY/20'CY: 900 PCS

TRD2006

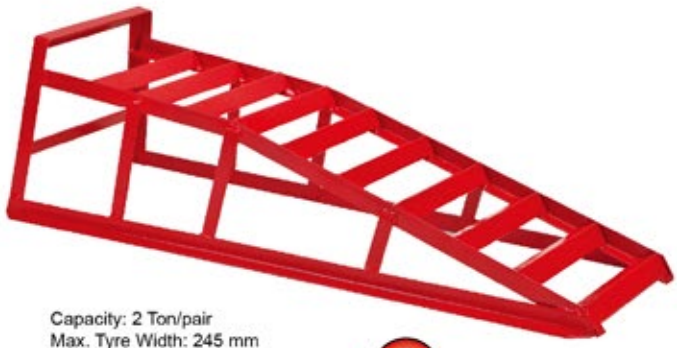

Capacity: 2 Ton/pair
Max. Tyre Width: 245 mm
Package Size: 930x370x295 mm
N.W.: 7.9 kgs
G.W.: 8.4 kgs
QTY/CTN: 2 PCS
QTY/20'CY: 430 PCS

2 TON

TRD2003

3 TON

Capacity: 3 Ton/pair
Max. Tyre Width: 270 mm
Package Size: 1150x375x450 mm
N.W.: 12.1 kgs
G.W.: 16 kgs
QTY/CTN: 2 PCS
QTY/20'CY: 600 PCS

20 TON

TRE2002G

Capacity: 20 Ton/pair
Max. Tyre Width: 343 mm
Package Size: 1390x1020x372 mm/pair
N.W.: 67 kgs
G.W.: 85 kgs
QTY/CTN: 2 PCS
QTY/20'CY: 50 PCS

Features:

Stronger than steel ramps allow you to work confidently under cars, trucks and SUVs, including low-clearance vehicles. Constructed of super-strong structural form plastic. Improved tread pattern increases traction and reduces shifting. Core-Trac nonskid feet, space-saving stackable design.

Plastic, Nestable
Widest , Strongest

TRD2005

Capacity: 2.5 Ton/pair
Max. Tyre Width: 240 mm
Package Size: 930x340x315 mm
N.W.: 4 kgs
G.W.: 4.3 kgs
QTY/CTN: 2 PCS
QTY/20'CY: 640 PCS

2.5 TON

Polisher

NEW PRODUCT

TRW2-180

TRW3-150

Model	Rated Voltage (v)	Rated Input Power (w)	No Load Speed (rpm)	G.W (kgs)	N.W (kgs)	Unit Size (mm)	Package Size (mm)	Container (20"/40"/40"HQ) (pcs)	MOQ (pcs)	QTY/CTN (pcs)
TRW2-180	230-240	1200	600-3400	15.8	15.2	450x125x260	530x465x280	1600/3360/3920	500	4
TRW3-150	230-240	900	0-6000	15.8	15.2	450x125x260	530x465x280	1600/3360/3920	500	4

Impact Wrench

Model	TRW-300D
Voltage DC(v)	12
Battery(mah)	2000
Max Torque(nm)	300
Charging Time(mins)	80
No Load Speed(rpm)	5500
Charger Input AC(v)	1/2
Charger Output AC	100-240(v) 50/60(hz)
Size of Spindle(")	12.6-13.5(v) 1.5(a)
G.W(kgs)	16.4
N.W(kgs)	15.8
Package Size(mm)	418x355x325
Container(20"/40"/40"HQ)(pcs)	2392/4876/5704
MOQ(pcs)	500
QTY/CTN(pcs)	4

TRW-300D

NEW PRODUCT

TRW-550

Model	TRW-550
Rated Voltage(v)	230-240
Rated Input Power(w)	520
No Load Speed(rpm)	3200
Forward(nm)	100
Reverse(nm)	320
Size of Spindle(")	1/2
G.W(kgs)	16.5
N.W(kgs)	16
Package Size(mm)	440x365x290
Container(20"/40"/40"HQ)(pcs)	2350/4950/5800
MOQ(pcs)	500
QTY/CTN(pcs)	4

TRW-1000

Model	TRW-1000
Rated Voltage(v)	230-240
Rated Input Power(w)	1010
No Load Speed(rpm)	2200
Max Torque(nm)	450
Size of Spindle(")	1/2
G.W(kgs)	22
N.W(kgs)	21
Package Size(mm)	480x390x315
Container(20"/40"/40"HQ)(pcs)	1936/3932/4608
MOQ(pcs)	500
QTY/CTN(pcs)	4

Geared Lug Wrench

The product with its 16:1 revolution ratio eliminates the hassle of tightening or loosening nuts of the cars.
This product includes 17mm, 19mm and 21mm half inch sockets.

TRX31005
Ratio: 1:16
Model: TRX31005
N.W.: 2.25 kgs
G.W.: 2.37 kgs
Package Size: 340x295x230 mm
QTY/CTN: 4 PCS
QTY/20'CY: 3600 PCS

Chrome Plated

TRX31002
Ratio:1:68
Change Truck Tire
Model: TRX31002
N.W.: 8.05 kgs
G.W.: 8.25 kgs
Package Size: 400x380x250 mm
QTY/CTN: 4 PCS
QTY/20' CY: 2200 PCS

TRX31003
Ratio:1:58
Change Truck Tire
Model: TRX31003
N.W.: 7.5 kgs
G.W.: 7.6 kgs
Package Size: 370x360x220 mm
QTY/CTN: 4 PCS
QTY/20'CY: 2600 PCS

TRX31004
Two-speed
Change Truck Tire
Model: TRX31004
N.W.: 8.6 kgs
G.W.: 8.8 kgs
Package Size: 350x310x225 mm
QTY/CTN: 3 PCS
QTY/20'CY: 2200 PCS

Socket Size

Model: 17, 19, 21, 22, 24, 27, 30, 32, 33, 34, 36, 38, 41 mm

Ratio:1:58
Big Power Loose

Ratio:1:3
Quick Loose

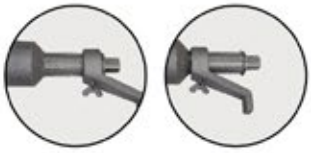

Handle can remove

www.tongrunjacks.com

Air Impact Wrench

- Twin Hammer mechanism.
- Directional smelting manufacture, light and durable, high power.
- Easy adjustable power regulator.
- Ideal for general repair on cars, tires, and heavy equipment

TRZM2811S

TRZM2811

TRZM3900S

TRZM3900

TRZM751

TRZM780

- Roking dog structure.
- One of the most popular impact wrenches in the market.
- Suitable for screw and unscrew work of big truck and lorry. Also can be used in the maintenance of bus and general equipments of large machines.

TRZM550A

TRZMA16

Model	Square	Free Speed (r.p.m)	Bolt Capacity (mm)	Max Torque (N.m)	Hammer Mechanism	Air Inlet	Air Pressure	Anvil Length	Moment Bound (N.m)	N.W. (kgs)	G.W. (kgs)	Package Size (mm)	QTY/CTN (PCS)	QTY/20'CY (PCS)	MOQ (PCS)
TRZM2811S	1/2"	8000	16	550	Twin Hammer	1/4"	6-8kgs/cm²	1"	200-700	2.6	4.5	425x290x250	5	4000	100
TRZM2811	1/2"	8000	16	550	Twin Hammer	1/4"	6-8kgs/cm²	1"	200-700	2.6	3.2	420x275x205	5	4000	100
TRZM3900S	1/2"	8000	18	900	Twin Hammer	1/4"	6-8kgs/cm²	1"	200-750	2.1	4	425x330x300	5	3500	100
TRZM3900	1/2"	8000	18	900	Twin Hammer	1/4"	6-8kgs/cm²	1"	200-750	2.1	2.6	420x215x255	5	3500	100
TRZM751	3/4"	5300	32	1450	Twin Hammer	3/8"	6-10kgs/cm²	1.5"	600-1300	5.8	6.5	310x290x235	2	2600	100
TRZM780	1"	4600	33	1600	Twin Hammer	3/8"	6-10kgs/cm²	1.5"	500-1400	7.3	8	310x290x235	2	2200	50
TRZM550A	1"	4500	41	2500	Pinless Hammer	1/2"	8-12kgs/cm²	2"	900-1850	14	18	660x295x170	1	800	50
TRZMA16	1"	3600	50	3260	Pinless Hammer	1/2"	8-12kgs/cm²	2"	1300-2850	18.5	19.5	755x250x210	1	400	50

Air Impact Wrench

TRZM5068

TRZMA16L

- Roking dog structure.
- One of the most popular impact wrenches in the market.
- Suitable for screw and unscrew work of big truck and lorry. Also can be used in the maintenance of bus and general equipments of large machines.

Model	Square	Free Speed (r.p.m)	Bolt Capacity (mm)	Max Torque (N.m)	Hammer Mechanism	Air Inlet	Air Pressure	Anvil Length	Moment Bound (N.m)	N.W. (kgs)	G.W. (kgs)	Package Size (mm)	QTY/CTN (PCS)	QTY/20'CY (PCS)	MOQ (PCS)
TRZM5068	1"	3800	48	3000	Pinless Hammer	1/2"	8-12kgs/cm²	8"	1300-2600	17	18	755x250x210	1	400	50
TRZMA16L	1"	3600	50	3260	Pinless Hammer	1/2"	8-12kgs/cm²	8"	1300-2850	18.5	19.5	755x250x210	1	400	50

Telescoping Lug Wrench

Lug wrench extends from 370mm to 550 mm for maximum leverage

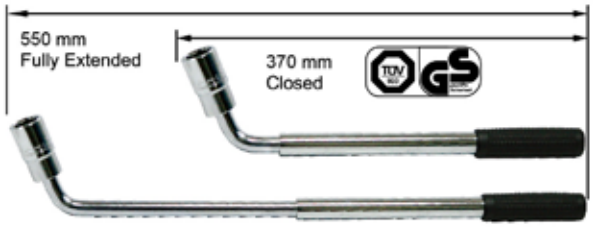

TRX83375

Socket Size: 17, 19, 21, 23 mm
N.W.: 1.2 kgs
G.W.: 1.3 kgs
Package Size: 470x310x270 mm
QTY/CTN: 12 PCS
QTY/20'CY: 7800 PCS

Lug Wrench

TRX31101
(03.1101)

TRX31301
(03.1301)

TRX31201
(03.1201)

Heavy Duty Truck Lug Wrench

Model	Specs (mm)	G.W. / N.W. (kgs)	Package Size (mm)	QTY/CTN (PCS)	QTY/20' CY (PCS)	MOQ (PCS)
TRX31101 (03.1101)	14" Ø 16x355	26 / 25	330x290x360	20	13140	50
	15" Ø 16x380	27 / 26	350x310x360	20	12660	50
	16" Ø 16x406	28 / 27	370x320x360	20	12200	50
	20" Ø 16x500	35 / 34	430x390x360	20	9360	50
	24" Ø 16x610	36 / 35	540x490x230	10	4750	50
TRX31201 (03.1201)	14" Ø 16x355	27 / 26	380x310x180	20	12660	50
TRX31301 (03.1301)	14" Ø 16x355	27 / 36	350x290x360	20	12660	50
	15" Ø 16x380	29 / 27	370x310x360	20	11780	50
	24" Ø 20x610	37 / 37	560x490x230	10	4000	50

TRLT31102

Model	Specs (mm)	N.W. / G.W. (kgs)	Package Size (mm)	QTY/CTN (PCS)	MOQ (PCS)
TRLT31102	16" Ø25x21x38x400 (Ø22x400)	29/30	410x250x130	10	50
	16" Ø25x21x41x400 (Ø22x400)	30/31	410x260x130	10	50
	16" Ø22x24x27x400 (Ø20x400)	22/23	410x200x110	10	50
	16" Ø22x27x30x400 (Ø20x400)	23/24	410x230x120	10	50
	16" Ø22x27x32x400 (Ø20x400)	23/24	410x230x120	10	50
	16" Ø22x30x32x400 (Ø20x400)	24/25	410x240x120	10	50
	16" Ø22x30x33x400 (Ø20x400)	24/25	410x240x120	10	50
	16" Ø22x32x33x400 (Ø20x400)	25/26	410x250x120	10	50

23 Piece Hydraulic Puller Set

TRK203D

Separator Set 7.5-10 Ton Capacity Hydraulic Ram with Tommy Bar. Suitable for Agricultural machines. Garage and Industrial Use.

Model	TRK203D
N.W. (kg)	16.6 kgs
G.W. (kg)	17.3 kgs
Package Size(mm)	455x300x100 mm
QTY/20'CY	607 PCS

Contents

- Hydraulic Ram 7.5-10 Ton ..... 1 PC
- Hydraulic Ram Center Bar ..... 1 PC
- 1x50 mm Ram Extension ..... 1 PC
- 1x100 mm Ram Eatension ..... 1 PC
- Puller Ram (4" 3 PCS), (6" 3 PCS), (8" 3 PCS)
- Triple Head for Puller ..... 1 PC
- Twin head ..... 1 PC
- Grooved Center Nut ..... 1 PC
- Head for Puller ..... 1 PC
- Pulling Bolt for Device with Nut ..... 2 PCS
- Pulling Bolt Extension ..... 2 PCS
- 4" Separator ..... 1 PC
- Metal Box ..... 1 PC
- Weight ..... 18 kgs

Slide Hammer Puller Kit

For Internal & External Pulling, 3 Jaws Exchangeable, 4 PCS Set

TRK201B

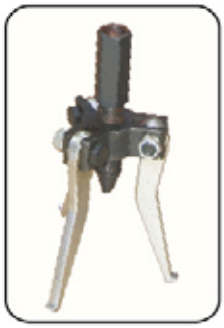

Model	TRK201B
Internal Dia (mm)	15-30 / 30-80
External Dia (mm)	15-80
N.W. / G.W. (kg)	25 / 27
Package Size (mm)	440x400x140
QTY / CTN (PCS)	5
QTY / 20'CY (PCS)	3100

Adjustable Hydraulic Gear Puller

360 Degree Rotatory Pump Handle, Integral Safety Vavel, Chrome Vanadiumplated, with Spring Draw Back.

This hydraulic gear puller is great for hard to handle jobs and includes a attached portable pump. The jaw clamps can be used in 2 or 3 jaw configurations and can be adjusted from large and small clamping. The puller has a center point for easy alignment. Also features a 360 degree rotating handle.

TRK208

Model	Capacity	Spread (mm)	Stroket (mm)	Jaws	N.W. / G.W. (kg)	Package Size (mm)	QTY/20'CY (PCS)
TRK208	5 Ton	200	60	2/3	7.5 / 7.8	450x165x130	2250
	10 Ton	250	80	2/3	12 / 12.3	450x165x150	1400
	15 Ton	350	80	2/3	16 / 16.5	480x165x180	1100
	20 Ton	400	80	2/3	17 / 17.5	480x165x180	1000
	30 Ton	450	90	2/3	22.5 / 24.5	485x210x195	200
	50 Ton	600	100	3	39.5 / 48.3	605x330x310	300

Engine Testing

TRHS-A1018

Tu-20-1 Cylinder Compression Pressure Tester

- 2.5"gauge with dual scale,reading from 0-300psi Ressure relief valve allows repeated on-vehicle test
- N.W./ G.W.: 0.97 kgs / 1.03 kgs
- Package Size: 470x315x435 mm
- QTY/CTN: 16 PCS
- MOQ: 16 PCS

TRHS-A1020C

TU-15 Cylinder Pressure Meter for Diesel Truck

- A comprehensive kit for testing the compression on both petrol and diesel vehicles.
- Features 600psi gauge with large rubber bumper, straight and right angled quick connect fittings and an extensive range of spark/glow plug and injector adaptors.
- This kit will cover most modern car, van, truck, bus, agricultural and marine engines.
- Spark Plug Sizes: 10, 12, 14, 18mm.
- Glow Plug Adaptors: Alfa Romeo,BMW, Chrysler, Citroen, Daewoo, Fiat, Ford, Honda, Hyundai, Isuzu, Jeep, Kia, Lada, Lancia, Land Rover, LDV, Mazda, Mercedes, MG, Mitsubishi, Nissan, Peugeot, Renault, Rover, Saab, Ssangyong, Suzuki, Toyota, VAG, Vauxhall, Volvo.
- Injector Adaptor: M20, M22, M24 & Ford Stanadyne injectors plus clamp-on injectors.
- N.W./ G.W.: 4.8 kgs / 5 kgs
- Package Size: 440x440x345 mm
- QTY/CTN: 5 PCS
- MOQ: 10 PCS

TRHS-A1021

Diesel Engine Compression Tester Set

- Measures cylinder pressure on diesel equipped cars and trucks.
- Supplied with one gauge and all necessary adapters 24.
- Gauges includes release valve and 368mm (14.5") of hose, dial reads from 0-1000 psi & 0-70 bar.
- Unique swivel and quick coupler allows the operator to connect the abapters quickly and easily.
- N.W./ G.W.: 4.8 kgs / 5 kgs
- Package Size: 440x440x345 mm
- QTY/CTN: 5 PCS
- MOQ: 10 PCS

TRHS-A3414

Engine Compression Tester Set

- Adaptive Inside: 10×1, 12×1.25, 14×1.25, 18×1.5.
- M10×M18 Screw repair driver
- M14×M18 Screw repair driver
- N.W./ G.W.: 2 kgs / 2.2 kgs
- Package Size: 530x340x315 mm
- QTY/CTN: 5 PCS
- MOQ: 10 PCS

TRHS-A0031

Compression Tester Kit

- Quickly and accurately check compression on petrol engines.
- Thread sizes: M18×1.5, M14×1.25, M10×1.0, M12×1.25
- N.W./ G.W.: 1.1 kgs / 1.2 kgs
- Package Size: 470x315x435 mm
- QTY/CTN: 16 PCS
- MOQ: 16 PCS

TRHS-E4002

4 in .14wheel drive ball jointremovwer/installer.kit

This tool kit is designed for use on all cars and light trucks that have press-fit type ball joints without the need to remove the control arm from the vehicle.
C-frame and forcing screw
installation adaptor
removal adaptor
installation cups
removal cups
receiving tubes

- 3 Receiving Tubes In Sizes 2-1/4" X 3", 1-3/4" X 2-1/2", And 1-3/4" X 2"
- 1 Install Adaptor
- 1 Remover Adaptor
- 1 Center Plug O.D. 7/8"
- 1 Receiving Tube O.D. 2-1/2", I. D. 2-1/4" Length 3/4"
- Receiving Cap Adaptor O.D. 2-1/4", I. D. 2" Length 2"
- Remover Installer O.D. 1-7/16", I. 3/4" Length 1"
- Receiving Cup O.D. 2-1/2", I. D. 1-1/4" Length 1-1/2"
- Receiving Tube O.D. 2-3/4", I. D. 1-7/16" Length 2-1/4"
- Receiving Tube O.D. 3", I. D. 2-3/4" Length 2-1/4"
- Receiving Cup O.D. 2-1/4", I. D. 2" Length 2"
- Receiving Tube O.D. 2-1/2", I. D. 2-1/4" Length 2-3/4"
- Installing Cup O.D. 2", I. D. 1-3/4" Length 2-5/16"
- Receiving Cup O.D. 2-7/8", I. D. 2-5/8" Length 3-7/8"
- Receiving Cup O.D. 2-7/16", I. D. 2-3/16" Length 3-3/16"
- Install Cup O.D. 2", I. D. 1-3/4" Length 3
- N.W./G.W.: 33 kgs / 34 kgs
- Package Size: 530x270x410 mm
- QTY/CTN: 50 PCS
- MOQ: 50 PCS

Engine Testing

TRHS-A1017

TU-7 Pressure Manometer For Compressive Air Cylinder

- Works on most domestic and foreign engines.
- 12" flexible hose for easy reach.
- Fits 14mm and 18mm spark plug holes.
- 0-300 psi
- Side release valve.
- N.W./ G.W.: 0.8 kgs / 0.88 kgs
- Package Size: 470x315x435 mm
- QTY/CTN: 16 PCS
- MOQ: 16 PCS

TRHS-A1020B

TU-15 Cylinder Pressure Meter for Diesel Truck

- With all the adaptor for diesel engine in the world.
- N.W./ G.W.: 3.4 kgs / 3.8 kgs
- Package Size: 395x295x410 mm
- QTY/CTN: 5 PCS
- MOQ: 10 PCS

No.	Item	Length	Thread
1	Glow plug adaptor	91 mm	M10x1
2	Glow plug adaptor	119 mm	M10x1
3	Glow plug adaptor	135 mm	M10x1.25
4	Glow plug adaptor	118 mm	M22x1.5
5	Dial gauge	340 mm	/
6	Glow plug adaptor	113 mm	M10x1
7	Glow plug adaptor	102 mm	M8x1
8	Glow plug adaptor	83 mm	M10x1
9	Glow plug adaptor	67 mm	M10x1.25
10	Glow plug adaptor	51 mm	M12x1.25
11	Screw adaptor	160 mm	M18x1.5
12	Injector adaptor	88 mm	M24x1.5
13	Injector adaptor	75 mm	M22x1.5
14	Injector adaptor	63 mm	M24x2
15	Injector adaptor	75 mm	M20x1.5
16	H fitting	/	/
17	Bleed valve	/	/

TRHS-A1000

Unique Compression

- Easy-reading 2-1/2" diameter gauge, features colour-coded quadruple, calibrations with 0-300psi, 21kg/cm, 21bar & 2100kpa.
- 13" durable rubber hose with 14mm / 18mm adapter.
- 6" heavy-duty stem with universal rubber cone adapter fits all plug holes.
- N.W./ G.W.: 0.7 kgs / 0.75 kgs
- Package Size: 560x330x220 mm
- QTY/CTN:20 PCS
- MOQ: 20 PCS

TRHS-A1014

Automatic Wave-box Pressure Meter

- Easy to read dual scale gauge. Complete with 24"(600mm) of oil proof hose with 1/8" NPT.
- Also includes 1/4" NPT and 3/8"NPT adaptors.
- Dual gauge readings: 0 to 500psi (0 to 35 bar)
- Gauge diameter: 3"
- N.W./ G.W.: 1.3 kgs / 1.4 kgs
- Package Size: 470x360x340 mm
- QTY/CTN:10 PCS
- MOQ: 20 PCS

TRHS-A3453

Engine Oil Pressure Tester

- Fault diagnostic kit for most vehicles
- With an Oil Pressure Warning light and switch. The kit enables testing of the switch, sensors, dashboard gauge and indicators linked to the oil pump.
- Permanently primed, oil filled hose with quick release couplings.
- 0-120psi (0-8Bar)
- N.W./ G.W.: 1.3 kgs / 1.4 kgs
- Package Size: 470x315x360 mm
- QTY/CTN:10 PCS
- MOQ: 20 PCS

Engine Testing

TRHS-A1998

Hand-held vacuum pump

- Hand-held vacuum pump
- Attach many kinds of joint to fit most kinds of vehicles.
- The body has the switch to control two kinds of pressure conditions.
- Include the parts of brake bleeder.
- N.W./ G.W.: 1.15 kgs / 1.25 kgs
- Package Size: 470x360x340 mm
- QTY/CTN:10 PCS
- MOQ: 20 PCS

TRHS-A1998A

Hand-held Vacuum Pump

- Attach many kinds of joints to fit most kinds of vehicles.
- The boby has the switch to control two kinds of pressure conditions.
- Contens: Vacuum pump ,Fluid Container, Transfer cap vacuum hoses; 2x580 mm, 2x80 mm,Assorted vacuum Hose fittings x5, Bleed Nipple Adaptors x3
- N.W./ G.W.: 1.5 kgs / 1.6 kgs
- Package Size: 470x370x335 mm
- QTY/CTN: 10 PCS
- MOQ: 10 PCS

TRHS-A1998B

Hand-held vacuum pump

- Hand-held vacuum pump
- Attach many kinds of joint to fit most kinds of vehicles.
- The body has the switch to control two kinds of pressure conditions.
- Include the parts of brake bleeder.
- Pressure range:
  positive pressure .0~60 psi (1~4inhg)
  negative pressure.0~-30 psi (0~-1inhg)
- N.W./ G.W.: 1.8 kgs / 2 kgs
- Package Size: 650x385x460 mm
- QTY/CTN:10 PCS
- MOQ: 20 PCS

TRHS-A0021

TU-21 Cylinder Leak Detector

- Tester checks the amount of leakage in an engine cylinder & helps determinethe source.
- Best used when comparing a suspect cylinder to a known good cylinder on same engine.
- Ideal for testing trucks & late model cars where clearance is minimal.
- Equipped with 2-1/2" input pressure gauge for proper leakage test setup and accurate results.
- N.W./ G.W.: 2 kgs / 2.3 kgs
- Package Size: 395x295x410 mm
- QTY/CTN: 5 PCS
- MOQ: 10 PCS

TRHS-A0030

Compression Tester Kit

- Pressure gauge scale: 0<->300psi
  (in 10 psi increments) , 0<->2000 kpa
  (in 100kpa increments).
- Pressure gauge hose: 26" long×3/8" diameter, 500 psi working pressure with quick disconnect.
- Hose adapters:
  Long reach: 10-1/2" Long×M12×1.25/500 PSI working pressure;
  Standard reach: 10-1/2"Long×M14×1.25/500 PSI working pres-sure;
  Standard reach: 10-1/2"Long×M10×1.00/500 PSI working pressure.
- N.W./ G.W.: 1.5 kgs / 1.6 kgs
- Package Size: 530x340x315 mm
- QTY/CTN: 10 PCS
- MOQ: 10 PCS

TRHS-A0020

TU-114 Oil Combustion Spraying Pressure Meter

- 3"gauge with dual scale, reading from 0-150psi (0-10bar)
- N.W./ G.W.: 2 kgs / 2.2 kgs
- Package Size: 395x295x410 mm
- QTY/CTN: 5 PCS
- MOQ: 10 PCS

Engine Testing

TRHS-A1011

TU-443 Multiple-function Oil Combustion Pressure Meter

- Comprehensive kit of adaptors and fittings for most fuel injection systems.
- 3-1/2" gauge with dual scale (psi and bar), reading from 0-140psi and 0-10bar.
- Hanging hook and protective bumper specially for gauge.
- Pressure release valve fitted with long drain hose allows safe recovery of pressure and fuel.
- N.W./ G.W.: 4 kgs / 4.3 kgs
- Package Size: 430x330x410 mm
- QTY/CTN: 3 PCS
- MOQ: 15 PCS

TRHS-A3306

27 PCS Radiator Pressure Tester Vacuum-Type Cooling System Kit

- 0 to 35 psi gauge range
- Adapters usable with most of domestic and imported cars
- Durable product design and unexcelled precision of tools
- Complete, all-in-one set allows quick and easy testing for leakage in radiator and prompt change of coolant
- 19 color coded radiator test caps
- N.W./ G.W.: 6 kgs / 6.33 kgs
- Package Size: 600x315x50 mm
- QTY/CTN:3 PCS
- MOQ: 21 PCS

TRHS-A1211

TU-112 Fuel Injection Pressure Test Set - Test Port

- Comprehensive kit of adaptors and fittings for modern Schrader test-port fuel injection systems.
- Components fitted with quick coupling system and safety valve to prevent inadvertent discharge of fuel under pressres.
- High pressure, dual scale gauge reading 0-145psi and 0-1000kpa with hanging hook and protective bumper.
- Pressure release valve with drain hose for safe fuel recovery
- N.W./ G.W.: 2.8 kgs / 3 kgs
- Package Size: 530x420x225 mm
- QTY/CTN: 8 PCS
- MOQ: 16 PCS

TRHS-A1020A

TU-15 Cylinder Pressure Meter for Diesel Truck

- Quick connect/disconnect feature allows one gauge to be used with variety of quick adapters for most popular diesel engines.
- Push pressure scale: 0 -1000 PSI 0 - 70 Bar
- N.W./ G.W.: 2.1 kgs / 2.3 kgs
- Package Size: 405x295x400 mm
- QTY/CTN: 5 PCS
- MOQ: 10 PCS

TRHS-A3310

Water Tank Leak Detector (14 PCS)

- Test cooling system for leaks.
- Includes hand pump, test head in a blowmold case.
- Suit for: Mitsubishi, Mazda, Subaru, Toyota, Honda, Ford GM, Chrysler, VW, Audi, Volvo, Saab, Mercedes Benz, BMW, Renault, Fiat, Alfa, Romeo, Infinti, Geo, Suzuki, Isuzu, Lexus, Opel, Peugeot, Jeep, Rover, Citrom, Truck.
- N.W./ G.W.: 4 kgs / 4.3 kgs
- Package Size: 400x330x410 mm
- QTY/CTN: 3 PCS
- MOQ: 12 PCS

TRHS-C1051A

R134A A/C Manifold Gauge Set (60",adjustable)

- Inclosed the 1107adjustable coupler.
- R-134a sight glass manifold with three 60" color-coded hoses.
- With sight glasses.
- High pressure: 0~500psi
  0~35Kg/cm^2
- Low pressure: 0~120psi
  -1~8.5Kg/cm^2
- Vacuum: 0~30 in/Hg
- N.W./ G.W.: 1.75 kgs / 1.85 kgs
- Package Size: 635x315x460 mm
- QTY/CTN: 10 PCS
- MOQ: 10 PCS

Puller Set

TRHS-E1243

Y706 Bearing Separator Assembly Kit

- Bearing separator inside.
- Pullout the bearing with the H-type beam bolts.
- N.W./ G.W.: 6 kgs / 6.25 kgs
- Package Size: 395x295x330 mm
- QTY/CTN: 4 PCS
- MOQ: 12 PCS

TRHS-E1143

Y706 Bearing Separator Kit

- Bearing separator inside.
- Pullout the bearing with the H-type beam bolts.
- N.W./ G.W.: 5.1 kgs / 5.3 kgs
- Package Size: 385x330x300 mm
- QTY/CTN: 5 PCS
- MOQ: 10 PCS

TRHS-E1244

Y709 Multi-functional Puller Combination Set

- For agriculture machine, automotive, and industry use.
- Packing: carrying case.
- N.W.: 16.8 kgs
- G.W.: 17 kgs
- Package Size: 430x225x410 mm
- QTY/CTN: 2 PCS
- MOQ: 10 PCS

TRHS-A1146

46 PCS Director Puller

- Multi-purpose puller set for removal of balancers, vibration dampers, pulleys, gears and flywheels.
- Drop forged four slot yoke with a variety of hex bolts and forcing screw tips provides a complete universal set.
- Contents:Yoke,5" Thrust Bolt,Centring Adaptors; Sma ll, Large, Flat, Bolts; 3/8"x24x1-1/2"x3PC, 3/8"x16x2"x3PC, 3/8"x16x3x3PC, 3/8"x16x4-1/2"x2PC, 5/16"x12x6"x2PC, 5/16"x18x3-1/2"x3PC, 5/16"x24x3"x2PC, 1/4"x28x2-1/2"x2PC, M10X1.25x35mmx3PCS, M8x1.25x45mmx3PCS, M8x1.25x65mmx2PCS M8x1.5x90mmx2PCS Washers:5/1" IPx3PCS, 1/4" IDx2PCS, 10mmIDx3PCS, 8mmIDx3PC
- N.W./ G.W.: 1.05 kgs / 1.1 kgs
- Package Size: 370x280x270 mm
- QTY/CTN:20 PCS
- MOQ: 20 PCS

TRHS-E0026

Inner Bearing Puller

- One slide hammer assemble & 4 clamp. Attachments for 3/8" to 1/2" (10-14 mm) 9/16" to 11/16" (15-19 mm), 5/8" (18-25 mm) &1" to 1-1/4" (25-32 mm).
- I.D. Bearing pulling.
- Open clamps by turning handle clockwise to snug against the bearing for pulling out evenly without damage the parts.
- N.W./ G.W.: 4.4 kgs / 4.6 kgs
- Package Size: 440x440x345 mm
- QTY/CTN: 5 PCS
- MOQ: 10 PCS

Body Repair Tool

TRHS-E3412

7 PCS Panel Beating Set

- Seven of the most common tools necessary for professional body work are included in this set: D1016, D1017, D1018, D1019, D1785, D1786 and D1789 apply.
- 4sets / 20 / 21 / 1.3'
- N.W./ G.W.: 7 kgs / 7.5 kgs
- Package Size: 400x355x350 mm
- QTY/CTN: 4 PCS
- MOQ: 20 PCS

TRHS-B1040

10 Piece Pneumatic Die Grind Kit

- One handed straight type die grinder with aluminium body and trigger with safety catch chuck accepts grinding points with Φ6mm shanks. Supplied with a selection of popular sized grinding points, two spanners and carry case.
- N.W./ G.W.: 1.1 kgs / 1.2 kgs
- Package Size: 290x240x430 mm
- QTY/CTN: 20 PCS
- MOQ: 20 PCS

TRHS-E1302

10 lbs Dent Puller Set

- N.W./ G.W.: 9 kgs / 9.5 kgs
- Package Size: 600x260x270 mm
- QTY/CTN: 2 PCS
- MOQ: 10 PCS

TRHS-E3450

Spring Compressor for Mercedes

- Mercedes: W116, W123, W124, W126, W129, W140, W170, W201, W202, W210.
- GM, Opel, Peugeot, Rover, Saab, Volvo, VW, Ford, issan, Mitsubishi, Mazda, Fiat, Hyundai, Lada, etc.
- Telescopic construction with 3-point safety interlock and automatic freewheel at end of stroke.
- Maximum compression range 325 mm.
- Minimum compression range 120 mm.
- N.W./ G.W.: 6 kgs / 6.3 kgs
- Package Size: 410x210x390 mm
- QTY/CTN: 2 PCS
- MOQ: 10 PCS

TRHS-E1301

Universal Axle Slide Hammer Set

- 2.5kg slide hammer with 570mm shaft
- Use eight ways:external three jaw puller, internal three jaw puller,external two jaw puller,internal two jaw puller,grip wrench adaptor,lip puller,hub puller,dent puller.
  puller type:Twin Leg
  Internal Capacity:Φ35-110mm
  Reach:82mm
  External Capacity:Φ50-140mm
  Reach:75mm
  Puller Type:Triple Leg
  Internal Capacity :Φ50-135mm
  Reach:82mm
  External Capacity:Φ20-135mm
  Reach:75mm
- N.W./ G.W.: 10.5 kgs / 11 kgs
- Package Size: 600x260x250 mm
- QTY/CTN:2 PCS
- MOQ: 10 PCS

TRHS-E3410

Interchangeable Spring Compressor Kit

- Approved by BGS german workers safety insurance.
- 850Kg Maximum jaw loading with 4x safety factor.
- Supplied with 2 pairs of drop forged yokes to suit springs from 80 mm to165 mm and 155 mm to 195 mm.
- Safety yokes carefully shaped to prevent coil spring from bowing.
- Wide availability of spare yokes.
- N.W./ G.W.: 16.8 kgs / 17 kgs
- Package Size: 430x225x410 mm
- QTY/CTN: 2 PCS
- MOQ: 10 PCS

Timing Locking Set

TRHS-E1000

Petrol Engine Timing Kit Opel & Vauxhall 1.0 1.2 1.4

- Kit includes all the locking tools to time the chain on 1.0 1.2 1.4 ecotec twin cam engines.
- Also includes the timing disc position gauge for positioning the timing sensor disc ftted to the inlet camshaft
- N.W./ G.W.: 1.4 kgs / 1.5 kgs
- Package Size: 560x250x200 mm
- QTY/CTN:10 PCS
- MOQ: 50 PCS

TRHS-E3504

Engine Timing Tools-VW & AUDI

- N.W./ G.W.: 5.1 kgs / 5.3 kgs
- Package Size: 385x330x300 mm
- QTY/CTN: 5 PCS
- MOQ: 10 PCS

TRHS-E3451

Engine Timing Locking Tool Kit (16 PCS)

- Undated kit of camshaft, crankshaft and fly wheel locking tools with wide general coverage suitable for a range of popular diesel and petrol engines. Suitable for use when carrying out timing belt changes. Includes updated flywheel locking tools for VW with round and oval profile teeth.
- Applications: Audi, Citroen, Fiat, Ford, Isuzu, Peugeot, Rover, Saab, Seat, Skoda, Vauxhall, VW
- N.W./ G.W.: 2.6 kgs / 2.8 kgs
- Package Size: 405x385x305 mm
- QTY/CTN: 5 PCS
- MOQ: 10 PCS

Brake Wind Back Tool

TRHS-E1245

14 PCS Cup Type Oil Filter Wrench Set

- Cap type filter wrenches,made from 7 and 16 or 1/2"sg drive wrenches, gange steel, will withstand up to Supplied in carry-case. 85lb.ft of torgue
- Designed to grip like sockets, thereby minimising the possibility of crushing filters
- Electro-black oxide finish for rust protection.
- Adaptor allows use with 3/8" or 1/2" sg drive wrenches.Supplied in carry-case.
- Contents:
  65-14F 68-14F 65/67-14F 76-14F
  76-30F 73-14F 75/77-15F 93-15F
  90-15F 100-15F 74/76-15F
  80-15F 80-82-15F 93-36F
- Adaptor:3/8" sg Drive(M)x1/2" sg Drive(F)
- N.W./ G.W.: 3.25 kgs / 3.38 kgs
- Package Size: 525x340x440 mm
- QTY/CTN:10 PCS
- MOQ: 50 PCS

TRHS-E3431

Ball Joint Separator

- N.W./ G.W.: 1.1 kgs / 1.2 kgs
- Package Size: 390x240x430 mm
- QTY/CTN: 10 PCS
- MOQ: 10 PCS

Item	Jaws opening	Applicable
B1966	23 mm	Audi, BMW, Citroen, Ford, Mercedes, Opel, Peugect,Rover, Saab, Volvo, VW, Japanische, Pkw etc.
B1967	28 mm	Audi, A4, A6, A8, VW, Passat ab'97 etc and Mercedes W203 etc.
B19672	34 mm	VW LT form'98 etc and Mercedes.

TRHS-E3463

14 PCS Master Ball Joint Adapter Set

- Material carbon steel.
- Service a wider range of vehicles with your existing ball joint service kit.
- This master ball joint adapter set includes receiver tubes and adapters for most gm, ford, dodge two-wheel drive, four-wheel drive pick-ups, vans and suvs.
- Constructed of forged carbon steel and a black oxide finish for toughness and durability, this ball joint set is designed to handle worksite abuse.
- The ball joint adapter set comes in a sturdy storage case for organization and transport.
- N.W./ g.W.: 6 kgs / 6.2 kgs
- Package Size: 410x300x100 mm
- QTY/CTN:4 PCS
- MOQ: 50 PCS

Ball Joint Separator

TRHS-E3501

Clutch Tool Set

- Necessary for pre-tensioning self adjusting clutches before removal installation
- Prevents plate distortion which may prevent the clutch from disengaging or cause dragging.
- Features a refitting tool, allowing the clutch adjuster to be wound back, and six alignment adaptors.
- Alignment adaptor sizes: Φ15/23mm, Φ15/28mm, Φ15/34mm, Φ21/23mm/ Φ20/23mm, Φ14&15/20mm
- Assembly flywheel threads: Φ6x1.00mm, Φ7x1.00mm, Φ8x1.25mm
- N.W./ G.W.: 5.1 kgs / 5.3 kgs
- Package Size: 385x330x300 mm
- QTY/CTN: 2 PCS
- MOQ: 10 PCS

TRHS-E1107

Spring Pressure Regulator

- Drop forged CR-V steel jaws & leaded screws (370mm) both heat treated ensure you obtain professional job performance.
- The tool is designed for use in limited space under wheel arch.
- Jaws design is fitting to wrap coil claws for safely.
- Maximum jaw opening is 370 mm.
- N.W./ G.W.: 2 kgs / 2.06 kgs
- Package Size: 385x340x295 mm
- QTY/CTN: 15 PCS
- MOQ: 15 PCS

TRHS-E3318A

Universal Caliper Wind Back Kit

- Winds back brake piston for replacingbrake pads.
- Applications: Audi, BMW, Ford, Honda, Jaguar, Mazda, Mercedes, Mitsubishi, Nissan, Saab Subaru, Toyota, VW.
- N.W./ G.W.: 1.9 kgs / 2 kgs
- Package Size: 470x370x335 mm
- QTY/CTN: 10 PCS
- MOQ: 10 PCS

TRHS-E3525

Press and Pull Sleeve Kit

- For the new VAG models with wheel housings/hub unit.
- Required for the correct installation.
- High time saving-faster execution at workshop press than at the vehicle ideally suited for wheel bearing diameters 62mm/66mm372mm(13"14"15"-undercarriages).
- The extension of the wheel housing takes place by means of the available workshop facility.
- N.W./ G.W.: 12.5 kgs / 13 kgs
- Package Size: 395x295x330 mm
- QTY/CTN: 2 PCS
- MOQ: 10 PCS

TRHS-E3318B

Positive & Negative Caliper Wind Back Kit

- Master set of adaptors for a wide range of vehicle applications.
- Suitable for push back and wind-back brake pistons.
- Includes left and right handed thrust bolt assemblies.
- Left handed thrust bolt reguired for Ford, Citroen and Renault applications.
- Precision made adaptor plates with thrust bolt assembly and reaction plate.
- Updated adapter set suitable for a wide variety of UK Vehides.
- Applications: Alfa Romeo, Audi, BMW, Citroen, Fiat, Ford, GM, Honda, Jaguar, Mazda, Mercedes, Mitsubishi, Nissan, Opel, Peugeot, Renau lt, Rover, Saap, Seat, Skoda, VW, Volvo, Subaru , Toyota, Vauxhall.
- N.W./ G.W.: 2.1 kgs / 2.2 kgs
- Package Size: 470x370x335 mm
- QTY/CTN: 10 PCS
- MOQ: 10 PCS

TRHS-E3243

Left-handed Brake Wind-back Tool

- Left-handed thrust bolt required for Ford, Citroen and Renault applications. Helps prevent damage to pistons and seals.
- Applications: Citroen, Ford, Renault
- N.W./ G.W.: 4.8 kgs / 5 kgs
- Package Size: 430x330x410 mm
- QTY/CTN: 10 PCS
- MOQ: 10 PCS

Threading Repair Tool

TRHS-E2660

Metric Bushing Driver Set Components (64 PCS)

- Easily repair sump,gearbox and differential drain plug threads.
- Tap the damaged thread, then fit a new drain plug and washer supplied.
- Set is suitable for the most popular threads used on cars and light commercial vehicles.
- Tap Sizes: M13, M15, M17, M20.
- N.W./ G.W.: 1.37kgs / 1.43 kgs
- Package Size: 395x295x410 mm
- QTY/CTN: 16 PCS
- MOQ: 16 PCS

TRHS-E2661

Drain Plug Thread Repair Set (96 PCS)

- A comprehensive thread repair set ideal for repairing sump, gearbox and differential drain plug threads.
- Used to tap the damaged thread slightly over size, then fit a new drain plug and washer supplied.
- Set is suitable for the most popular threads used on cars and light commercial vehicles.
- Supplied in carry-case.
- Tap Sizes: M13x1.25, M13x1.5, M15x1.5, M17x1.5, M20x1.5, M22x1.5mm
- N.W./ G.W.: 2.1 kgs / 2.2 kgs
- Package Size: 530X340X315 mm
- QTY/CTN: 10 PCS
- MOQ: 10 PCS

TRHS-E4001

Ball.Joint.separator

- Ball joint service kit 4 wheel drive adaptors
- Brake anchor pin removal and installation,
- 4 WHEEL DRIVE ADAPTORS
- This tool kit is designed for use on all cars and Light
- trucks that have press-fit type ball joints Without the
- Need to remove the control arm from the vehicle.
- C-frame and forcing screw
- installation adaptor
- removal adaptor
- installation cups
- removal cups
- receiving tubes
- N.W./G.W.: 8.6 kgs / 8.7 kgs
- Package Size: 350x200x70 mm
- QTY/CTN: 50 PCS
- MOQ: 50 PCS

TRHS-E2668

18 PCS Alternator Freewheel Pulley Removal Set

- Permits easy removal of freewheel alternator pulley, either on or off the vehicle.
- Allows alternator shaft to be held while the pulley retainer is removed.
- Incorporates a complete range of combination TRX-Star*, spline and hex adaptors to fit most alternators.
- Supplied in carry-case.
- N.W./ G.W.: 1.9 kgs / 2 kgs
- Package Size: 400x310x320 mm
- QTY/CTN:10 PCS
- MOQ: 20 PCS

TRHS-E1026

- A large 9.0 liter(2.35gallon)capacity pneumatic fluid extractor, can be used to extract many kinds of non-explosive liquids.
- Completely automatic using normal shop air.
- New safety design, when the tank is full of liquid, air inlet mechanism will be shut off automatically.
- One man, fast, clean and easy operating.
- None electric spark, safety for workshop.
- Max air consumption: 5.0 cfm.
- Descripton: Pneumatic fluid extractor(9 liters)
- Working psi: 70~170psi
- Pressure bar: (4.9~11.9)
- Capacity: 9.0 l
- Air inlet: 1/4"
- Tank Capacity: 2.0L
- Bottle Capacity: 1.0L
- N.W./G.W.: 1.3 kgs / 1.4 kgs
- Package Size: 300x150x250 mm
  QTY/CTN: 50 PCS
  MOQ: 50 PCS

TRHS-E1025

- Brake fluid bleeder works with your air compressor to quickly assist in your brake bleeding!
- Flush and refill the entire brake system by yourself with this brake fluid bleeder.
- Comes with:
- 34 oz Waster Brake Fluid Tank
- 24 oz New Fluid tank that inserts into your master cylinder with 4 different provided adapters
- Size(s) 25/32 in. to 1-7/32 in. diameter (21 To 30mm),
- 31/32 in. to 1-1/4 in. diameter (24 To 32mm),
- 1-3/32 in. to 1-15/32 in. (28 To 37mm),
- 1-1/4 in. to 1-19/32 in. (32 To 41mm)
- Air requirement: 90 to 120 PSI, Air inlet: 1/4"- 18 NP
- Bleeds hydraulic brakes quick and effectively
- N.W./G.W.: 1.6 kgs / 1.7 kgs
- Package Size: 280x130x220mm
- QTY/CTN: 50 PCS
- MOQ: 50 PCS

Automotive Repair Tools Set

TRHN-20

20PCS 1/2" DR. Socket Wrench Set

- N.W.: 3.8 kgs
- G.W.: 20 kgs / CTN
- Package Size: 380x330x290 mm
- QTY/CTN: 5 PCS

Contents

12PCS	1/2" DR. Metric Socket: 10,11,12,13,14,15,16, 17,18,19,22,24 mm
3PCS	1/2" DR. Deep Socket: 13,17,19 mm
1PC	1/2" DR. Quick Ratchet Handle 72T
1PC	1/2" DR. Extension Bar: 10"
1PC	1/2" DR. Spark Plug Socket: 16 mm
1PC	1/2" DR. Universal Joint
1PC	1/2" Multi Adapter 3/8"Fx1/2"M

TRHN-32

32PCS 1/2" DR. Socket Wrench Set

- N.W.: 4.4 kgs
- G.W.: 23 kgs / CTN
- Package Size: 395x360x290 mm
- QTY/CTN: 5 PCS

Contents

19PCS	1/2" DR. 6PT Metric Socket: 8,9,10,11,12,13, 14,15,16,17,18,19,20,21,22,24,27,30,32 mm
6PCS	1/2" DR.12PT Metric Socket: 10,12,14,15, 17,19 mm
1PC	1/2" DR. Quick Ratchet Handle 72T
1PC	1/2" DR. Universal Joint
2PCS	1/2" DR. Extension Bar: 5",10"
2PCS	1/2" DR. Spark Plug Socket: 16,21 mm
1PC	1/2" Multi Adapter 3/8"Fx1/2"M

TRHN-46A

46PCS 1/4" DR. Socket Wrench Set

- N.W.: 1.42 kgs
- G.W.: 18 kgs / CTN
- Package Size: 555x420x145 mm
- QTY/CTN: 12 PCS

Contents

13PCS	1/4" DR. Metric Socket: 4,4.5,5,5.5,6,7,8,9,10, 11,12,13,14 mm
21PSC	1/4" DR. Socket Bits: HW3,HW4,HW5, HW6, HW7,HW8 / PH1,PH2,PH3 / PZ1,PZ2,PZ3 SL4,SL5.5,SL7 / T10,T15,T20,T25,T30,T40
3PCS	Hex Key Wrench: 1.5,2,2.5 mm
1PC	1/4" DR. Universal Joint
1PC	1/4" DR. Flexible Extension: 6"
1PC	1/4" DR. Sliding T-bar
1PC	1/4" DR. Quick Ratchet Handle 72T
2PCS	1/4" DR. Extension Bar: 2",4"
1PC	1/4" DR. Spinner Handle: 6"
1PC	1/4" DR. Bit Adapter

TRHN-86

86PCS 1/4" & 1/2" DR. Socket Wrench Set

- N.W.: 5.5 kgs
- G.W.: 23 kgs / CTN
- Package Size: 390x320x30.5 mm
- QTY/CTN: 4 PCS

Contents

14PCS	1/4" DR. Metric Socket: 3.5,4,4.5,5,5.5,6,7,8,9,10,11,12,13,14 mm
8PCS	1/4" DR. Deep Socket: 6,7,8,9,10,11,12,13 mm
2PCS	1/4" DR. Extension Bar: 2",4"
1PC	1/4" DR. Universal Joint
1PC	1/4" DR. Quick Ratchet Handle 72T
1PC	1/4" Spinner Handle: 6"
17PCS	1/4" Socket Bit: SL4,5.5,7 / PH1,2 / PZ1,2 HEX3,4,5,6 / T8,T10,T15,T20,T25,T30
1PC	1/4" DR. Sliding T-bar
14PCS	1/2" DR. Metric Socket: 10,13,15,16,17,18,19,20,21,22,24,27,30,32 mm
4PCS	1/2" DR. Deep Socket: 14,15,17,19 mm
2PCS	1/2" DR. Extension Bar: 5",10"
2PCS	1/2" DR. Spark Plug Socket: 16,21 mm
1PC	1/2" DR. Universal Joint
1PC	1/2" DR. Quick Ratchet Handle 72T
1PC	1/2" DR. Bit Holder
1PC	1/2" Multi Adapter 3/8"Fx1/2"M
15PCS	BITS(30L): SL8,SL10,SL12 / T40,T45,T50,T55 / PH3,PH4 / PZ3,PZ4, HEX8,HEX10,HEX12,HEX14

TRHN-46DA

46PCS 1/2" DR. Socket Wrench Set

- N.W.: 6 kgs
- G.W.: 26 kgs / CTN
- Package Size: 390x320x305 mm
- QTY/CTN: 4 PCS

Contents

20PCS	1/2" DR.Metric Socket: 8,9,10,11,12,13,14,15,16,17,18,19,20,21, 22,23,24,27,30,32 mm
7PCS	1/2" DR. Deep Socket: 10,12,13,14,15,17,19 mm
11PCS	1/2" DR. Sae Socket: 3/8", 7/16", 1/2",9/16", 5/8",11/16", 3/4", 13/16", 7/8", 15/16",1"
1PCS	1/2" DR. Quick Ratchet Handle 72T
1PCS	1/2" DR. Flexible Handle: 10"
2PCS	1/2" DR. Extension Bar: 5",10"
2PCS	1/2" DR. Spark Plug Socket: 16,21 mm
1PCS	1/2" DR. Universal Joint
1PCS	1/2" Multi Adapter 3/8"Fx1/2"M

Automotive Repair Tools Set

TRHN-120

Contents

10PCS	Combination Wrench: 8,9,10,11,12,13,14,17, 18,19mm
10PCS	1/4" DR. Metric Socket: 4,5,6,7,8,9,10,11,12,13 mm
10PCS	1/4" DR. Sae Socket: 5/32",3/16",7/32",1/4",9/32", 5/16",11/32",3/8",7/16",1/2"
4PCS	1/4" DR. Deep Socket: 8,9,10,12 mm
1PC	1/4" DR. Extension Bar: 2"
1PC	1/4" DR. Spinner Handle: 6"
1PC	1/4" DR. Bit Coupler
11PCS	3/8" DR. Metric Socket: 9,10,11,12,13,14,15,16,17, 18,19mm
9PCS	3/8"DR.SAE SOCKET: 3/8",7/16",1/2",9/16",5/8", 11/16",3/4",13/16",7/8"
8PCS	3/8" DR. E-socket: E8,E10,E11,E12,E14,E16,E18,E20
4PCS	3/8" DR. Deep Socket: 13,14,15,17 mm
17PCS	3/8" Dr.socket Bits: T20,T30,T40,T45,T50,T55,T60, HW3,HW4,HW5,HW6 / PH1,PH2 / FD5.5,6.5 / PZ1, PZ2
2PCS	3/8" DR. Spark Plug Socket: 16,21 mm
2PCS	3/8" DR. Extension Bar: 3",6"
7PCS	1/2" DR. Metric Socket: 20,21,22,24,27,30,32 mm
4PCS	1/2" DR. Sae Socket: 15/16",1",1-1/16",1-1/4"
4PCS	1/2" DR. Impact Socket: 17,19,21,23 mm
2PCS	1/2" DR. Extension Bar: 5",10"
3PCS	Quick Ratchet Handle 72T : 1/4",3/8",1/2"
3PCS	Universal Joint: 1/4",3/8",1/2"
7PCS	1/4" DR. Bits Set: T10,T15,T20,T25,T27,T30,T40

120PCS 1/4" & 3/8" & 1/2" DR. Socket Wrench Set

- N.W.: 9.5 kgs
- G.W.: 20 kgs / CTN
- Package Size: 475x350x210 mm
- QTY/CTN: 2 PCS

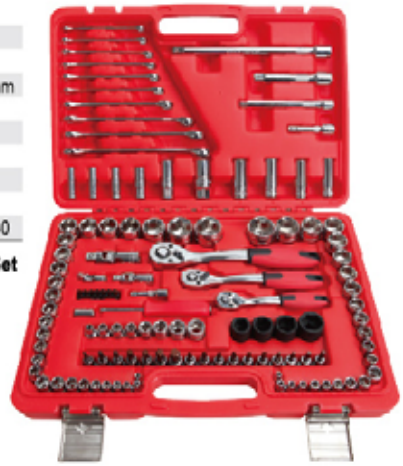

TRHN-121

Contents

10PCS	1/4" DR. Metric Socket: 4,5,6,7,8,9,10,11,12,13 mm
4PCS	1/4" DR. Deep Socket: 8,9,10,12 mm
1PC	1/4" DR. Bit Coupler
1PC	1/4" Spinner Handle: 6"
1PC	1/4" Extension Bar: 2"
18PCS	1/4" Bits: T10,T15,T20,T25,T27,T30,T40 / SL4,SL5, SL6.5 / PH1,PH2 / HW3,HW4,HW5,HW6 / PZ1,PZ2
1PC	1/4" Multi Adapter 1/4"Fx3/8"M
11PCS	3/8" DR. Metric Socket: 9,10,11,12,13,14,15,16,17, 18,19 mm
8PCS	3/8" DR. E-socket: E8,E10,E11,E12,E14,E16,E18,E20
4PCS	3/8" DR. Deep Socket: 13,14,15,17 mm
2PCS	3/8" Extension Bar: 3",6"
17PCS	3/8" Socket Bits : T20,T30,T40,T45,T50,T55,T60 HW3,HW4,HW5,HW6 / PH1,PH2 / SL5.5-SL6.5, PZ1,PZ2
7PCS	1/2" DR. Metric Socket: 20,21,22,24,27,30,32 mm
1PC	1/2" Multi Adapter 3/8"Fx1/2"M
2PCS	1/2" DR. Spark Plug Socket: 16,21 mm
2PCS	1/2" Extension Bar: 5",10"
3PCS	Quick Ratchet Handle 72T: 1/4",3/8",1/2"
3PCS	Universal Joint: 1/4",3/8",1/2"
11PCS	Combination Wrench: 8,9,10,11,12,13,14,16,17, 18,19mm
2PCS	Screwdriver: (+)2x100mm,(-)6x100mm
1PC	Automotive Circuit Tester (6V-12V-24V)
1PC	1/2" DR. Socket Bits :T52x100mmL
1PC	Three Jaw Oil Filter Wrench
9PCS	Ball Point Hex Key Set: 1.5,2,2.5,3,4,5,6,8, 10 mm

121PCS Socket Wrench Set

- N.W.: 9 kgs
- G.W.: 10 kgs / CTN
- Package Size: 380x330x290 mm
- QTY/CTN: 1 PC

TRHN-150

Contents

10PCS	1/4" DR. Metric Socket: 4,5,6,7,8,9,10,11,12,13 mm
10PCS	1/4" DR. Sae Socket: 5/32",3/16",7/32",1/4",9/32", 5/16",11/32",3/8",7/16",1/2"
6PCS	1/4" DR. Deep Socket: 4,5,6,7,8,9 mm
1PC	1/4" Extension Bar: 4"
1PC	1/4" Universal Joint
1PC	1/4" DR. Quick Ratchet Handle 72T
1PC	1/4" DR. Spinner Handle: 6"
1PC	1/4" DR. Bit Coupler
11PCS	3/8" DR. Metric Socket: 9,10,11,12,13,14,15,16, 17,18,19mm
6PCS	/8" DR.Deep Socket: 10,11,12,13,14,15 mm
9PCS	3/8" Sae Socket: 3/8",7/16",1/2",9/16",5/8",11/16", 3/4",13/16",7/8"
22PCS	3/8" DR. Socket bits: SL4,SL5.5,SL6.5 / T20,T30, T40,T45,T50,T55,T60 / PH1,PH2,PH3 / PZ1,PZ2, PZ3 / HW3,HW4,HW5,HW6,HW8,HW10
8PCS	3/8" DR. E-socket: E8,E10,E11,E12,E14,E16,E18,E20
2PCS	3/8" DR. Extension Bar: 3",6"
2PCS	3/8" DR. Spark Plug Socket: 16,21 mm
1PC	3/8" DR. Universal Joint
1PC	3/8" DR. Quick Ratchet Handle 72T
7PCS	1/2" DR. Metric Socket: 20,21,22,24,27,30,32 mm
4PCS	1/2" DR. Sae Socket: 15/16",1",1-1/16",1-1/4"
4PCS	1/2" DR. Impact Socket: 17,19,21,23 mm
6PCS	1/2" DR. Deep Socket: 10,12,13,14,17,19 mm
2PCS	1/2" DR. Extension Bar: 5",10"
1PC	1/2" DR. Quick Ratchet Handle 72T
1PC	1/2" DR. Universal Joint
3PCS	Offset Ring Ratchet Wrench: 8-10,12-13, 17-19 mm
12PCS	Combintaion Wrench: 8,9,10,11,12,13,14, 15,16,17,18,19 mm
7PCS	Bits Set: T10,T15,T20,T25,T27,T30,T40
9PCS	Hex Key Wrench Set: 1.5,2,2.5,3,4,5,6,7, 8,10mm

150PCS 1/4" & 3/8" & 1/2" DR. Socket Wrench Set

- N.W.: 11 kgs
- G.W.: 12 kgs / CTN
- Package Size: 500x375x135 mm
- QTY/CTN: 2 PCS

Plastic Tool Box

NEW PRODUCT

TRJH-3015
TRJH-3018
TRJH-3021

Folding Plastic Tool Box

NEW PRODUCT

TRJH-3430
TRJH-3490

Model	Material	Product Size (mm)	N.W. (kgs)	G.W. (kgs)	Packing (PC/Shrink)	Package Size (mm)	QTY/CTN (PCS)	QTY/20' (PCS)	MOQ (PCS)
TRJH-3015	Plastic Tool Box	390x220x190	12	13	1	630x395x600	9	1683	500
TRJH-3018	Plastic Tool Box	440x260x230	9	10	1	500x440x700	6	1092	500
TRJH-3021	Plastic Tool Box	530x310x290	9	10	1	580x540x570	4	628	500

Model	Material	Product Size (mm)	N.W. (kgs)	G.W. (kgs)	Packing (PC/Bubblebag)	Package Size (mm)	QTY/CTN (PCS)	QTY/20' (PCS)	MOQ (PCS)
TRJH-3430	Folding Plastic Tool Box	430x200x185	14.5	15.5	1	620x450x580	9	1557	500
TRJH-3490	Folding Plastic Tool Box	490x260x220	9	10	1	540x510x450	4	904	500

Trolley Tool Box

TRJH-3904

NEW PRODUCT

Model	Material	Product Size (mm)	N.W. (kgs)	G.W. (kgs)	Package Size (mm)	QTY/CTN (PCS)	QTY/20' (PCS)	MOQ (PCS)
TRJH-3904	Plastic Trolley Tool Box	550x330x680	14	15	580x385x785	2	270	200

Plastic & Steel Tool Box

TRJF-3016N 15.5"

TRJF-3015N 18.5"

TRJF-3014N 23"

TRJF-301HABCN
3 in 1 Tool Box Set

Model	TRJF-3016N	TRJF-3015N	TRJF-3014N	TRJF-301HABCN
Material	PP and Steel	PP and Steel	PP and Steel	PP and Steel
Product Size (mm)	395x180x170	470x238x203	582x298x255	395x180x170 (TRJF-3016N) 470x238x203 (TRJF-3015N) 582x298x255 (TRJF-3014N)
N.W. (kgs)	1.4	2	3.25	13.4
G.W. (kgs)	1.9	2.5	3.7	14.6
Packing	Shrink per unit+Carton	Shrink per unit+Carton	Shrink per unit+Carton	Shrink per unit+Carton
Package Size (mm)	555x405x525 mm	475x480x635 mm	610x590x525 mm	595x390x520 mm
QTY/CTN (PCS)	9	6	4	2
QTY/20' CY(PCS)	2166	1158	529	634
MOQ (PCS)	306	300	300	100

Plastic & Stainless Steel Tool Box

TRJF-3026Y 15.5"

TRJF-3025Y 18.5"

TRJF-3024Y 23"

TRJF-302HABCY
3 in 1 Tool Box Set

Model	TRJF-3026Y	TRJF-3025Y	TRJF-3024Y	TRJF-302HABCY
Material	PP and Stainless Steel	PP and Stainless Steel	PP and Stainless Steel	PP and Stainless Steel
Product Size (mm)	395x180x170	470x238x203	582x298x255	395x180x170 (TRJF-3026Y) 470x238x203 (TRJF-3025Y) 582x298x255 (TRJF-3024Y)
N.W. (kgs)	1.4	2.1	3.3	13.6
G.W. (kgs)	1.9	2.6	3.8	14.8
Packing	Shrink per unit+Carton	Shrink per unit+Carton	Shrink per unit+Carton	Shrink per unit+Carton
Package Size (mm)	555x405x525 mm	475x480x635 mm	610x590x525 mm	590x390x520 mm
QTY/CTN (PCS)	9	6	4	2
QTY/20' CY(PCS)	2133	1158	529	468
MOQ (PCS)	306	300	300	100

Handy Tool Box

Durable and Lightweight

Model	TRJF-C3002	TRJF-C3009
Product Size	410x215x180 mm	502x257x230 mm
Inner size	380x180x145 mm	460x220x185 mm
Max. Capacity	17.5 kgs	20 kgs
N.W.	12.6 kgs	12.8 kgs
G.W.	13.6 kgs	14.2 kgs
Package Size	650x420x380 mm	530x510x475 mm
QTY/CTN	6 PCS	4 PCS
QTY/20'CY	1614 PCS	876 PCS

TRJF-C3002 16"
TRJF-C3009 20"

Material: PP, Steel and Aluminum

TRJF-C3002+C3009
2 in 1 Handy Tool Box Set

Model: TRJF-C3002+C3009
Product Size: 410x215x180 mm (TRJF-C3002)
502x257x230 mm (TRJF-C3009)
N.W.: 10.6 kgs
G.W.: 11.8 kgs
Packing: Shrink per set+Carton
Package Size: 505x335x475 mm
QTY/CTN: 2 PCS
QTY/20' CY: 682 PCS
MOQ: 200 PCS

Tool Box With Drawer

TRJF-A3061B
Material: PP and Steel

Model: TRJF-A3061B
Product Size: 497x253x230 mm
Inner size: 460x220x100 mm
Drawer inner size: 390x215x50 mm
Max.Capacity: 30 kgs
N.W.: 13.2 kgs
G.W.: 14.2 kgs
Package Size: 515x510x305 mm
QTY/CTN: 2 PCS
QTY/20'CY: 728 PCS
MOQ: 200 PCS

TRJF-A3061BC
Material: PP and Steel

Model: TRJF-A3061BC
Product Size: 515x245x510 mm
Inner size: 460x220x100 mm
Inner size (lower): 460x220x100 mm
Drawer inner size(higher): 390x215x50 mm
Max.Capacity: 40 kgs
N.W.: 10 kgs
G.W.: 11 kgs
Package Size: 515x260x420 mm
QTY/CTN: 1 PC
QTY/20' CY: 508 PCS
MOQ: 200 PCS

All Items Have Ball Bearing Slides

Trolley Tool Box

TRJF-A305ABD
Material: PP and Steel

Trolley tool box made up of 3 parts, 1st one is a regular box with a tray inside, the 2nd is a 2 layer drawer with ball bearing sliding rail, and the bottom is a big storage box, each part can be seperated or combined freely.

Model: TRJF-A305ABD
MAX. Capacity: 75 kgs
Product Size: 520x320x720 mm
Inner size(A): 420x220x150 mm
Inner size(B): 390x215x60 mm
Inner size(D): 410x210x280 mm
N.W.: 14.3 kgs
G.W.: 15.7 kgs
Packing: PE bag per unit+Carton
Package Size: 560x365x790 mm
QTY/20'CY: 221 PCS
MOQ: 100 PCS

TRJF-C305ABD
Material: PP and Steel

Trolley tool box made up of 3 parts, 1st one is a regular box with aluminum handle and a tray inside, the 2nd is a 2 layer drawer with ball bearing sliding rail, and the bottom is a big storage box, each part can be seperated or combined freely.

Model: TRJF-C305ABD
Product Size: 520x320x720 mm
Inner size(A): 460x220x185 mm
Inner size(B): 390x215x60 mm
Inner size(D): 410x210x280 mm
N.W.: 14.5 kgs
G.W.: 15.9 kgs
Packing: PE bag per unit+Carton
Package Size: 560x365x790 mm
QTY/20'CY: 225 PCS
MOQ: 100 PCS

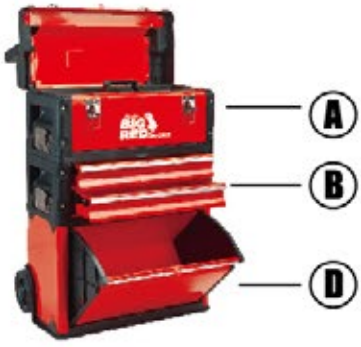

TRJF-A308ABCC
Material: PP and Steel

Mobil Installation tool box made up of a regular tool box with compartments on top lid and a tray inside and five drawers with ball bearing sliding rail.

Model: TRJF-A308ABCC
Product Size: 410x265x550 mm
N.W.: 11.2 kgs
G.W.: 12.1 kgs
Packing: PE bag per unit+Carton
Package Size: 470x305x605 mm
QTY/20' CY: 409 PCS
MOQ: 100 PCS

All Items Have Ball Bearing Slides

Tool Set In Metal Box

TRGW00048

48 PCS Mechanical Tools Set

- N.W.: 6.2 kgs
- G.W.: 6.7 kgs
- Package Size: 480x230x210 mm
- QTY/20'CY: 1342 PCS

Contents

- 9 PCS 3/8" Dr. Socket: 14, 15, 16, 17, 18, 19, 20, 21, 22mm
- 1 PC 3/8" Dr. Extension Bar: 6"
- 1 PC 3/8" Universal Joint
- 1 PC Socket Adaptor: 3/8"x1/4"
- 1 PC 3/8" Dr. Ratchet Wrench 72 Teeth with Quick Release
- 12 PCS 1/4" Dr. Socket: 4, 4.5, 5, 5.5, 6, 7, 8, 9, 10, 11, 12, 13mm
- 1 PC 1/4" Spinner Handle
- 4 PCS Screwdriver: SL5x75, SL6x100mm / PH1x75, PH2x100mm
- 9 PCS Hex Key Wrench: 1.5, 2, 2.5, 3, 4, 5, 6, 8, 10mm
- 4 PCS Double Open Spanner: 8x9, 10x11, 12x13, 14x15mm
- 1 PC 6" Long Nose Plier
- 1 PC 7" Combination Plier
- 1 PC 10" Water Pump Plier
- 1 PC 8" Locking Plier
- 1 PC 6" Adjustable Wrench

TRGW00048

TRGW00064

64 PCS Mechanical Tools Set

- N.W.: 7.2 kgs
- G.W.: 7.6 kgs
- Package Size: 447x225x230 mm
- QTY/20'CY: 1300 PCS

Contents

- 7 PCS Socket: 4, 5, 6, 7, 8, 9, 10mm
- 8 PCS 3/8" Dr. Socket: 11, 12, 13, 14, 15, 16, 17, 19mm
- 1 PC Socket Adaptor: 3/8"x1/4"
- 1 PC 1/4" Dr. Bit Holder Driver with Handgrip
- 1 PC 3/8" Dr. Ratchet Wrench
- 1 PC 3/8" Extension Bar: 150mm
- 9 PCS Hex Key Wrench: 1.5, 2, 2.5, 3, 4, 5, 6, 8, 10mm
- 1 PC 20x25mm Bits
- 1 PC 10" Hack Saw
- 1PC 7" Combination Plier
- 1 PC 6" Long Nose Plier
- 11 PCS Combination Wrench: 8,10, 11, 12, 13, 14, 15, 16, 17, 18, 19mm
- 1 PC 8" Adjustable Wrench
- 1 PC Machinist's Hammer: 300g

TRGW00064

TRGW00086

86 PCS Mechanical Tools Set

- N.W.: 10.3 kgs
- G.W.: 10.79 kgs
- Package Size: 520x230x250 mm
- QTY/20'CY: 990 PCS

Contents

- 18 PCS 1/2" Dr. Socket: 8, 9, 10,11, 12, 13, 14, 15, 16, 17, 18, 19, 20, 21, 22, 24, 24, 27mm
- 2 PCS Extension Bar with 10" Adaptor with 3-Way Adaptor
- 12 PCS 1/4" Dr. Socket: 4, 4.5, 5, 5.5, 6, 7, 8, 9, 10,11, 12, 13mm
- 5 PCS Screwdriver: SL5x75, SL6x100mm, SL6x150mm PH1x75, PH1x100mm
- 9 PCS Hex Key Wrench: 1.5, 2, 2.5, 3, 4, 5, 6, 8, 10mm
- 10 PCS Combination Spanner: 6, 8, 9, 10,11, 12, 13, 14, 15, 17mm
- 12 PCS Bits: 5xSL3, 4, 5, 6, 7mm / 5xPH0, 1, 2, 3, 4mm / 2xPZ
- 1 PC 1/2" Dr. Ratchet Wrench
- 1 PC 1/2" Dr. Universal Joint
- 1 PC Extension Bar: 1/2"x5"
- 1 PC Utility Knife: 18mm Blade
- 1 PC 1/4" Dr. Ratchet Wrench
- 1 PC Extension Bar: 1/4"x3"
- 1 PC 6" Combination Plier
- 1 PC 6" Long Nose Plier
- 1 PC 10" Water Pump Plier
- 1 PC 8" Locking Plier
- 1 PC 1/2" Dr. Ratchet Handle
- 1 PC Magnetic Holder: 60mm
- 10 PCS Blades: 18mm Wide
- 1 PC Tape Measure: 3x16mm

TRGW00086

Tool Set In Metal Box

TRGW00088

TRGW00088

88 PCS Mechanical Tools Set

- N.W.: 10.25 kgs
- G.W.: 10.72 kgs
- Package Size: 538x232x240 mm
- QTY/20'CY: 990 PCS

Contents

- 14 PCS 1/2" Dr. Socket: 10,11, 12, 13, 14, 15, 16, 17, 18, 19, 20, 21, 22, 24mm
- 2 PCS Ratchet Handle 72 Teeth with Quick Release:1/4", 1/2"
- 2 PCS Extension Bar:1/2"x5", 1/2"x10" with 3-Way Adaptor
- 11 PCS 1/4" Dr. Socket: 4, 4.5, 5, 5.5, 6, 7, 8, 9, 10,11, 12mm
- 10 PCS Bits: SL:3, 4, 5, 6mm / PH:0, 1, 2, 3mm / PZ:1, 2mm
- 4 PCS Screwdriver: SL6x100mm / PH1x75, PH5x75, PH6x100mm
- 12PCS Spanner: 6, 7, 8, 9, 10,11, 12, 13, 14, 15, 16, 17mm
- 9 PCS Hex Key: 1.5, 2, 2.5, 3, 4, 5, 6, 8, 10mm
- 1 PC 10" Water Pump Plier
- 2 PCS Universal Joint:1/4", 1/2"
- 2 PCS 1/2" Dr. Plug Socket: 16, 21mm
- 1 PC Extension Bar: 1/4"x3"
- 1 PC 1/4" Spinner Handle
- 1 PC 160mm Long Nose Plier
- 1 PC Measure Tape : 5x19mm
- 1 PC Knife: 18mm
- 1 PC 1/4" Spinner Handle
- 1 PC 1/4" Bits Adaptor
- 1 PC 160mm Locking Plier
- 1 PC 160mm Diagonal Cutting Plier
- 10 PCS Blades: 18mm Wide

TRGW00074

74 PCS Mechanical Tools Set

- N.W.: 8.36 kgs
- G.W.: 8.81 kgs
- Package Size: 380x250x250 mm
- QTY/20'CY: 1242 PCS

Contents

- 2 PCS 1/4" Dr. Socket: 4, 4.5, 5, 5.5, 6, 7, 8, 9, 10,11, 12, 13mm
- 9 PCS 1/2" Dr. Socket: 8, 9, 10, 11, 12, 13, 14, 15, 17mm
- 2 PCS Spark Plug Socket: 16, 21mm
- 2 PCS Universal Joint: 1/4", 1/2"
- 1 PC Bits Adaptor: 1/4"x30mm
- 1 PC Extension Bar: 1/4"x3"
- 1 PC Extension Bar: 1/2"x5"
- 1 PC 1/4" Sliding T-bar
- 1 PC 1/4"Sprinner Handle
- 2 PCS Ratchet Wrench: 1/4", 1/2" with 72 T
- 1 PC Bit Holder: 1/4"x1/4", 25mm
- 6 PCS Screwdriver: SL4x75, SL5x100mm / PH0x75, PH1x100, PH2x100mm
- 1 PC 24x25mm Bits
- 1 PC 10" Hack Saw
- 1 PC Machinist's Hammer: 300g
- 1 PC 6" Combination Plier
- 1 PC 6" Long Nose Plier
- 7 PCS Combination Wrench: 8, 9, 10, 11, 12, 13, 14mm

TRGW00074

TRGW00092

TRGW00092

92 PCS Mechanical Tools Set

- N.W.: 12.34 kgs
- G.W.: 12.94 kgs
- Package Size: 562x260x300 mm
- QTY/20'CY: 651 PCS

NEW PRODUCT

Contents

- 12 PCS 1/4" Dr. Socket: 4, 4.5, 5, 5.5, 6, 7, 8, 9, 10,11, 12, 13mm
- 13 PCS 1/2" Dr. Socket:14, 15, 16, 17, 18, 19, 20, 21, 22, 24, 27, 30, 32mm
- 2 PCS Extension Bar:1/4"x75mm, 1/2"x250mm
- 4 PCS Screwdriver: SL5x75mm, SL6x100mm / PH1x75, PH2x100mm
- 15 PCS Combination Spanner: 6, 7, 8, 9, 10,11, 12, 13, 14, 15, 16, 17, 18, 19, 21, 22mm
- 9 PCS Hex Key Wrench: 1.5, 2, 2.5, 3, 4, 5, 6, 8, 10mm
- 2 PCS 1/2" Dr. Spark Plug Sockets
- 2 PCS Universal Joint:1/4", 1/2"
- 1 PC Extension Bar: Flexibile,1/4"
- 2 PCS Ratchet Wrench 72 Teeth:1/4", 1/2"
- 1 PC 24x25mm Bits
- 1 PC 1/4" Dr. Spinner Handle
- 1 PC Magnetic Bits Holder: 60mm
- 1 PC 1/4" Dr. Bits Holder Driver
- 1 PC 7" Combination Plier
- 1 PC 6" Diagonal Cutting Plier
- 1 PC 6" Long Nose Plier

Tool Cabinet with Tools

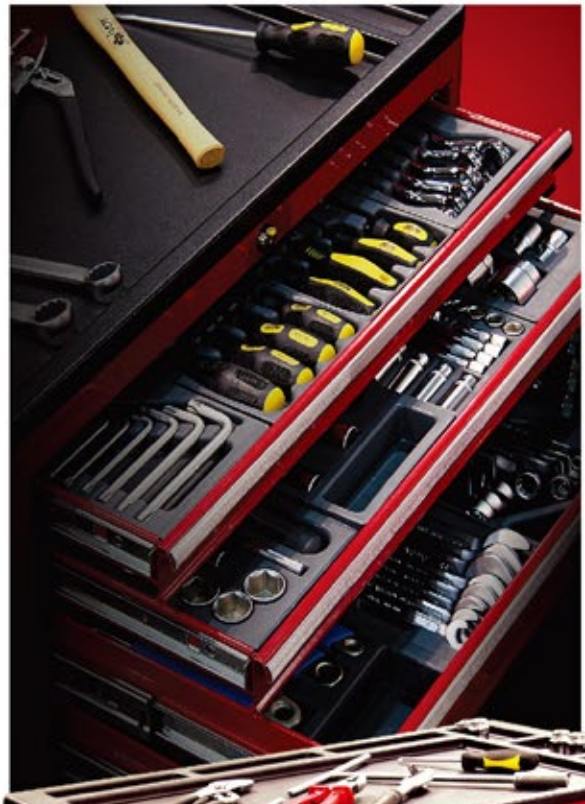

TBR3007B-X

Heavy Duty Rubber Wheel with Brake (5" x2")

Ball Bearing Slide

	W x D x H
Overall	688x458x735 mm
Overall with Casters	688x458x885 mm
2 Drawers	589x409x480 mm
2 Drawers	589x409x745 mm
2 Drawers	589x409x100.5 mm
1 Drawers	589x409x153 mm
N.W.(empty)	71 kgs
G.W.(empty)	76.5 kgs
Package	770x530x845 mm
QTY/CTN	1 PC
QTY/20'CY	174 PCS

Tool Cabinet with Tools

TRHN1101

9PC 1/4 Deep Socket: 4,5,6,7,8,9,10,11,12mm
23PC 1/4 Socket Bits: T8,T10,T15,T20,T25,T30,T40,PH1,PH2,PH3,PZ1,PZ2, PZ3,SL3,SL4,SL5,SL6,H3,H4,H5,H6,H7,H8
9PC Hex Key Set: 1.5,2,2.5,3,4,5,6,8,10mm

TRHN1102

6PC Hex Key Wrench Set: 2.0x100mm, 2.5x100mm,3.0x100mm,4.0x150mm, 5.0x150mm,6.0x150mm

TRHN1103

8PC Double Ring Wrench Set: 6x7,8x9,10x11,12x13,14x15,16x17,18x19, 20x22mm

TRHN1104

7PC Screwdriver Set: SL6x38, SL3x75,SL3.5x75, SL4x100, SL5.5x100, SL6.5x150, SL8x175

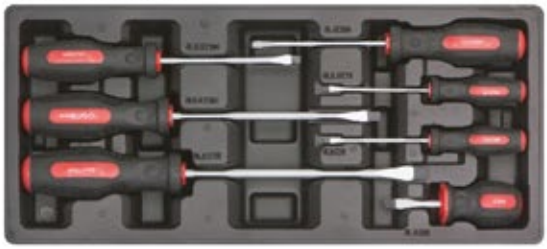

TRHN1105

7PC Screwdriver Set: PH2x38, PH0x75, PH1x100, PH2x100, PH2x125, PH3x150, PH4x200

TRHN1106

7PC Precision Screwdriver: PH00,PH0,PH1,SL3.0,SL2.5,SL2.0,SL1.5
6PC Electrical Screwdriver: PH1x100,PH2x100,SL3x75,SL4x100,SL5.5x125 SL6.5x150
8PC Hex Key Set: 1.5,2,2.5,3,4,5,6,8mm

TRHN1107

17PC 1/2 Socket 10,11,12,13,14,15,16,17,18, 19,21,22,23,24,27,30,32mm
1PC 1/2 Universal Joint
1PC 1/2 Sliding Bar
2PC 1/2 Extension Bar: 5",10"
1PC 1/2 Ratchet Handle

TRHN1108

17PC 3/8"DR. SOCKET:6,7,8,9,10,11,12,13,14,15,16,17,18,19,20,21,22mm
1PC 3/8"DR.UNIVERSAL JOINT
1PC 3/8"DR. SLIDING T BAR
1PC 3/8"DR x 3" EXTENSION BAR
1PC 3/8"DR x 6" EXTENSION BAR
2PC 3/8"DR. SPARK PLUG SOCKET: 16,21mm
7PC 3/8" DR. TX SOCKETS:E10,E11,E12,E14,E16,E18,E20,
1PC 3/8" RATCHET HANDLE

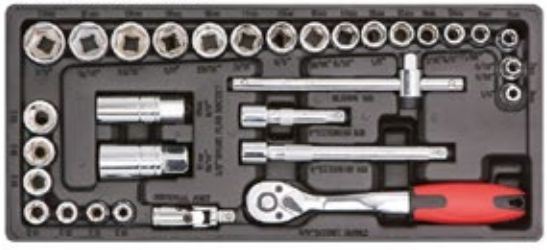

Tool Cabinet with Tools

TRHN1115

17PC Combination Wrench Set: 6,7,8,9,10,11,12,13,14,15,16,17,18,19,20, 21,22mm

TRHN1110

1PC 10" Locking Plier
1PC 10" Groove Joint Plier

TRHN1111

4PC 7"Snap Ring Plier With Dipped Handle(Internal,External)

TRHN1112

1PC 6"Long Nose Plier
1PC 6"Diagonal Plier
1PC 7"Combination Plier

TRHN1113

5PC 1PC Flat
1PC Half Round, 1PC Triangle
1PC Round, 1PC Square

TRHN1114

1PC 300g Machinist's Hammer
1PC 35mm Install Hammer

TRHN1109

13PC 1/4"DR.Socket 4,4.5,5,5.5,6,7,8,9,10,11,12,13,14MM
1PC 1/4 Universal Joint
1PC 1/4 Sliding Bar
2PC 1/4 Extension Bar: 2", 4"
1PC 1/4 Ratchet Handle
1PC 1/4 Spinner Handle

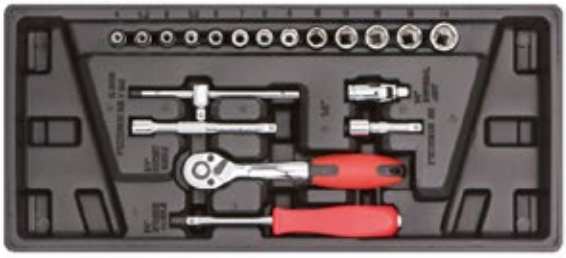

TRHN1116

80PC 200mm Cable tie
164PC Fuse: 10AMP 20PC, 15&20AMP,
10PC Each, 25&30, 10PC Each,
5&7.5, 10PCEach, 7.5&10&15AMP,
7PC Each, 20&25&30AMP,
7PC Each, 6.35x25MM, 5AMP, 10AMP
15AMP, 20AMP, 25AMP, 30AMP,
7Pcs Each

Tool Cabinet with Tools

TRHN1118

1PC 9.5" Rivet Plier
100PC Rivets

TRHN1124

Assortment Case

TRHN1119

17PC Ratchet Combination Wrench Set: 6,7,8,9,10,11,12,13,14,15,16,17,18,19, 20,21, 22mm

TRHN1121

3PC Adjustable Wrench: 6",8",10"

TRHN1120

6PC Flare Nut Wrench Set: 6x8,10x12,13x14,15x17,19x21,22x24mm

TRHN1117

1PC 3m Measuring Tape, 1PC 1m Folding Ruler, 1PC 9"Torpedo Level, 1PC Mini Hack Saw,1PC 25cm Angle Square

TRHN1122

6PC Gothrough Screwdriver Set
SL6x38mm
SL3x75mm
SL4x100mm
SL5x100mm
SL6x150mm
SL8x200mm

TRHN1123

6PC Gothrough Screwdriver Set
PH2x38
PH0x75
PH1x100
PH2x100
PH3x150
PH4x200

Tool Cabinet with Tools

	W x D x H
Overall with Casters	724x470x1032 mm
2 Drawers	570x410x54 mm
4 Drawers	570x410x112 mm
1 Drawers	570x410x170 mm
N.W.(empty)	70.5 kgs
G.W.(empty)	76 kgs
Package	807x546x1050 mm
QTY/CTN	1 PC
QTY/20'CY	66 PCS

TBR9007B-X

TRGJ5001

- 13 PCS Socket:4,4.5,5,5.5,6,7,8,9,10,11,12,13,14mm
- 9 PCS Deep Socket :5,6,7,8,9,10,11,12,13mm
- 23 PCS Socke Bit(6150):SL4,5.5,7 PH1,2,3 PZ1,2,3 Hex3,4,5,6,7,8 T8,T10,T15,T20,T25,T27,T30,T40
- 3 PCS Extension Bar:50,100,150m
- 1 PC Sliding T Bar1-Spinner Handle
- 1 PC Universal Joint dle: 400gr
- 9 PCS Hex Ball Key:1.5,2,2.5,3,4,5,6,8,10mm
- 1 PC Ratchet Handle(72T)

TRGJ5002

- 17 PCS Socket:6,7,8,9,10,11,12,13,14,15,16,17,18,19,20,21,22mm
- 2 PCS Spark Plug Socket: 16,21mm
- 2 PCS Extension Bar: 75,150mm
- 1 PC Sliding T Bar
- 1PC Universal Joint
- 1 PC Ratchet Handle(72T)

Tool Cabinet with Tools

TRGJ5012

- 7 PCS Hinged Socket Wrench 6*7,8*9,10*11,12*13,14*15,16*17, 18*19mm

TRGJ5009

- 16 PCS Combinatian Wrench 6,7,8,9,10,11,12,13,14,15,16,17,18,19, 22,24mm

TRGJ5003

- 20 PCS Socket:8,10,11,12,13,14,15,16,17,18,19,20,21,22,23,24,27,28 30,32mm
- 2 PCS Extension Bar: 125,250mm
- 1 PC Adaptor For Extension:3/8" "(F)*1/2" "(M)
- 1 PC Universal Joint
- 1 PC Ratchet Handle(72T)

TRGJ5015

- 5-Chisel:22*220,19*200,16*175,12*150,10*140mm
- 1 PC Cape Chisel:11*150mm
- 1 PC Center Punch:11*150mm
- 3 PC Taper Punch:5*130,4*130,3*130mm
- 3 PC Pin Punch:6*150,4*125,3*125mm

TRGJ5014

- 1PC 300g Engineer Hammer(HICKOPY)
- 1 PC 400g Rubber Hammer

TRGJ5011

- 8 PCS Office Ring Wrench 6*7,8*9,10*11,12*13,14*15,16*17,18*19, 21*23m

TRGJ5006

- 1 PC 200mm Long Nose Plier
- 1 PC 150mm Diagional Plier
- 1 PC 175mm Combination Plier

TRGJ5019

- 3 PCS Combinatian Wrench 27, 30, 32MM

TRGJ5010

- 11 PCS Double Open End Wrench 6*7,8*9,10*11,12*13,14*15,16*17,18*19,20*22,21*23,24*27,30*32mm

TRGJ5008

- 1-250mm Waterpump Plier
- 1-250mm Locking Plier

Tool Cabinet with Tools

PROFESSIONAL GRADE

TBRSL3043

TBRS28071

TBRS3307-L

NEW PRODUCT

TBRS303P7

TWO OPTIONAL CHOOSE

1 - Plastic Tools Tray (6 sets ot tools set)
2 - EVA Tools Tray (15 sets ot tools set)

PLASTIC
Tools Tray

EVA
Tools Tray

www.tongrunjacks.com

Tool Cabinet with Tools

- Ball Bearing Slide
- Heavy Duty Caster 5x2"
- Heavy Duty Side Handle
- Professional Brake Wheel
- Internal Locking System for Extra Security

Model	TBRS303P7
Overall Size	710x465x930 mm
Drawer Size	535x400x55 mm (5 Drawers) 535x400x125 mm (1 Drawer) 535x400x195 mm (1 Drawer)
N.W.	48 kgs
G.W.	52 kgs
Package Size	740x490x970 mm
QTY/CTN	1 PC
QTY40'CY	146 PCS
MOQ	20 PCS

TBRS303P7

NEW PRODUCT

TBRS3307-L

Model	TBRS3307-L
Overall Size	752x450x807 mm (without casters)
Drawer Size	532x400x72 mm (5 Drawers) 532x400x149.5 mm (2 Drawers)
N.W.	51.3 kgs
G.W.	60.4 kgs
Package Size	825x525x885 mm
QTY/CTN	1 PC
QTY20'CY	72 PCS
MOQ	20 PCS

Tool Cabinet with Tools

PROFESSIONAL GRADE

- Ball Bearing Slide
- Heavy Duty Caster 5x2"
- Heavy Duty Side Handle
- Professional Brake Wheel
- Internal Locking System for Extra Security

NEW PRODUCT

All drawers are equipped with quick locks

Model	TBRS28071
Overall Size	706x461x842 mm (without casters)
Drawer Size	569x400x75 mm (5 Drawers) 569x400x154 mm (2 Drawers)
N.W.	62.5 kgs
G.W.	65.5 kgs
Package Size	766x5200x902 mm
QTY/CTN	1 PC
QTY20'CY	66 PCS
MOQ	20 PCS

TBRS28071

NEW PRODUCT

Model	TBRSL3043
Overall Size	690x490x830 mm (without casters)
Drawer Size	530x395x55 mm (2 Drawers) 530x395x80 mm (1 Drawer)
N.W.	42 kgs
G.W.	45 kgs
Package Size	750x565x515 mm
QTY/CTN	1 PC
QTY20'CY	124 PCS
MOQ	20 PCS

TBRSL3043

Plastic Tools Tray

Value & Quality Tools You Can Trust

TBTA001

- 9PCS T Type Hex Key: T10x75, T15x75, T20x100, T25x100, T30x150, T40x150, T45x200, T50x200, T55x200
- 9PCS T Type Ball Point Hex Key: H2x75, H2.5x75, H3x100, H4x100 H5x150, H6x150, H8x200, H10x200, H12x200 mm CRV Material With Satin Finish

TBTA005

- 300 mm Hacksaw frame
- 160mm Vernier caliper
- 0.05-1.0mmFeeler
- 10PCS Punch chisel
- 5M Metal Tape
- 1PC Hammer Mechanist Hammer: 300 G
- 1PC Installation hammer
- 3PCS Live wrench: 6", 8",10".
- 1PC Wire brush

TBTA006

- 18PCS 1/2" Socket: 10,11,12,13,14,15,16,17,18,19,20,21,22,23,24,27,30,32 mm
- 13PCS 1/4" Socket: 4,4.5,5,5.5,6,7,8,9,10,11,12,13 ,14mm
- 4PCS 1/2" Deep socket: 14,15,17,19 mm
- 8PCS 1/4" Deep socket: 6,7,8,9,10,11,12,13 mm
- 17PCS 1/4" Socket bits: SL4,SL5.5,SL7 ,H3,H4,H5,H6 ,T10,T15,T20,T25,T30,T40, PH1,PH2, PZ1,PZ2
- 15PCS 30mm bits SL8,SL10,SL12,PH3,PH4,PZ3,PZ4,T40,T45,T50,T55,H8,H10, H12,H14
- 60PCS 25mm Screwdrivers With 1PC Bits Connection Bar
- 6PCS 1/4 Attachment:2",4"Connection Bar 6" Flexible Connection Bar,Sliding Bar, Universal joint,Coupler
- 5PCS 1/2 Attachment:3-Way Joints,5",10" Connection Bar,Universal Joint,Coupler
- 2PCS Ratchet Handle:1/4",1/2"
- 2PCS 1/2 Spark Wrench:16.21mm
- 3PCS Hey Key
- 10PCS Power Bits

TBTA004

- 5PCS Mini pliers: needle nose plier, diagonal cutting plier, end cutting plier, combination plier,flat nose plier,
- 4PCS 7" circliop pliers
- 7" combination plier
- 6" diagonal cutting plier
- 6" wire stripper plier
- 8" bent nose plier
- 8" long nose plier
- 10" water pump plier
- 10" locking plier

TBTA002

- 6PCS slot screwdriver : 6x38, 3x75, 5x100, 6x100, 8x150, 9x200 mm
- 5PCS philips screwdriver: PH2x38, PH0x75, PH1x75 PH2x100, PH3x150 mm
- 12PCS torx screwdriver: T5x75, T6x75, T7x75, T8x75, T9x75, T10x75, T15x100, T20x100, T25x100, T27x125, T30x125, T40x150 mm
- 4PCS T type socket wrench: 6x270, 8x270, 10x270, 13x270mm
- 1PC Volter Tester

TBTA003

- 5PCS double flexible socket wrench: 8x9, 10x11, 12x13, 14x15, 16x17 mm
- 8PCS double open end wrench: 6x7, 8x9, 10x11, 12x13, 14x15, 16x17, 18x19 20x22 mm
- 8PCS double ring wrench: 6x7, 8x9, 10x11, 12x13, 14x15, 16x17, 18x19, 20x22 mm
- 19 PCS combination wrench:6,7,8, 9, 10, 11, 12, 13, 14, 15, 16, 17, 18, 19, 20, 21, 22,24, 27 mm

EVA Tools Tray

Value & Quality Tools You Can Trust

TBRT1303

- 6PCS Double Flexible Socket Wrench(CR-V): 8x9,10x11,12x13,14x15,16x17, 18x19 mm
- 11PCS Double Ring Wrench (CR-V): 6x7,8x9,10x11,12x13,14x15,16x17, 18x19,20x22, 21x23,24x27,25x28 mm

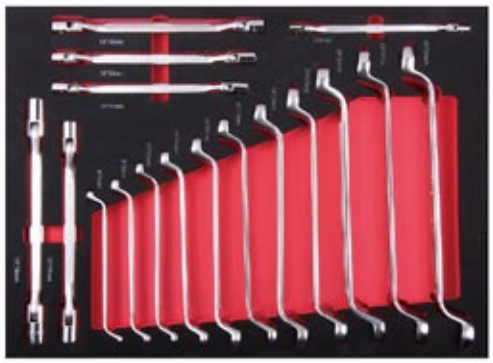

TBRT1306

- 12PCS European Type Double Open End Wrench (CR-V): 6x7, 8x9, 10x11, 12x13, 14x15, 16x17, 18x19, 20x22, 21x23, 24x27, 25x28, 30x32 mm
- 12PCS Flexible Combination Socket Wrench(CR-V): 8,9,10,11,12,13,14,15,16,17, 18,19 mm

TBRT1314

- 3PCS Adjustable Wrench With Rubber Handle: 6",8",10"
- 4PCS 11"Long Reach Plier:0,20,45,90
- 1PC Germany Type Stone Hammer: 1000g
- 1PC Germany Type Machinist's Hammer: 400g
- 1PC Rubber Hammer: 400g
- 1PC Professional Rubber Mallet With Wooden Handle: 400g

TBRT1305

- 22PCS European Type Combination Wrench (CR-V): 6,7,8,9,10,11,12,13,14,15,16,17,18,19,20,21,22,23,24,27, 30,32 mm

TBRT1307

- Professional Screwdrives(CR-V): 23PCS
  Slottde:SL 6x38, SL3x75, SL5x75, SL6x100, SL8x150 mm
  Phillips: PH2x38, PH0x75, PH1x75, PH2x100, PH3x150 mm
  Torx: T5x75, T6x75, T7x75, T8x75, T9x75, T10x75, T15x100, T20x100, T25x100, T27x125, T30x125, T40x150 mm
  Pry Bar: 1PC 8"

TBRT1308

- 10PCS Professional T Handle Ball Point Hex Key(CR-V): 1.5, 2, 3, 3.5, 4, 5, 6, 7, 8, 10 mm
- 7PCS Hex Nut Driver(CR-V): 6, 7, 8, 9, 10, 11, 12 mm
- 1PC Magnetic Pick-Up Tool: 10LB

EVA Tools Tray

Value & Quality Tools You Can Trust

TBRT1301

- 19PCS 1/2" DR. Sockets(CR-V): 8,9,10,11,12,13,14,15,16,17,18, 19,20, 21,22,24,27,30,32 mm
- 15PCS 3/8" DR. Sockets(CR-V): 9,10,11,12,13,14,15,16,17,18, 19,20, 21,22,24 mm
- 10PCS 1/2" DR. Deep Sockets(CR-V): 8,9,10,11,12,13,14,15,17,18 mm
- 9PCS 3/8" DR. Deep Sockets(CR-V): 8,10,11,12,13,14,15,16,17 mm
- 8PCS 3/8" DR. Sockets(CR-V): E8,E10,E11,E12,E14,E16,E18,E20
- 1PC 3/8" DR.Extension Bar:3"
- 1PC 3/8" Universal Joint
- 1PC 3/8" DR. Quick Ratchet Handle
- 4PCS 1/2" DR. Impact Sockets: 17,19,21,23 mm
- 1PC 1/2" DR. Extension Bar:5"
- 1PC 1/2" Universal Joint
- 1PC 1/2"DR. Bit Holder
- 1PC 1/2" DR. Quick Ratchet Handle
- 2PCS 1/2" DR. Spark Plug Sockets:16,21 mm

TBRT1302

- 3PCS Hex Key Wrench(CR-V): 1.5,2,2.5 mm
- 9PCS Hex Key Wrench Set Ball Point(CR-V): 1.5,2,2.5,3,4,5,6,8,10 mm
- 9PCS Torx Key Wrench Set (CR-V): T10,T15,T20,T25,T27,T30,T40,T45,T50
- 22PCS 3/8" DR.Screwdriver Bits Sockets(CR-V): SL4,SL5.5,SL6.5 / PH1,PH2,PH3 PZ1,PZ2,PZ3 / HW3,HW4,HW5,HW6,HW8,HW10 / T20,T30,T40,T45,T50,T55,T60
- 21PCS 1/4" DR.Screwdriver Bits Sockets(CR-V): HW3,HW4,HW5,HW6,HW7,HW8 PH1,PH2,PH3 / PZ1,PZ2,PZ3 / SL4,SL5.5,SL7 / T10,T15,T20,T25,T30,T40
- 13PCS 1/4" DR. Sockets(CR-V): 4,4.5,5,5.5,6,7,8,9.10,11,12,13,14 mm
- 10PCS 1/4" DR. Deep Sockets(CR-V): 4,5,6,7,8,9,10,11,12,13 mm
- 1PC 1/2" DR. Sliding T-BAR(CR-V)
- 1PC 1/4" DR. Sliding T-BAR(CR-V)
- 1PC 1/2" DR. Extension Bar(CR-V): 10"
- 1PC 3/8" DR. Extension Bar(CR-V): 6"
- 2PCS 1/4" DR. Extension Bar(CR-V): 2",4"
- 1PC 1/4" DR. Flexible Extension(CR-V):6"
- 1PC 1/4" DR. Spinner Handle(CR-V)
- 1PC 1/4" DR. Bit Adaptor
- 1PC 1/4" DR. Universal Joint(CR-V)
- 1PC 1/4" DR. Bit Coupler
- 1/4" DR. Quick Ratchet Handle(CR-V): 1PC

TBRT1304

- 12PCS Ratchet Combination Wrench(CR-V):8,9,10,11,12,13,14,15,16,17,18,19 mm
- 12PCS Flexible Ratchet Combination Wrench(CR-V): 8,9,10,11,12,13,14,15,16,17, 18,19 mm
- 6PCS Gear Combination Wrench(CR-V): 8*9,10*11,12*13,14*15,16*18,17*19 mm

TBRT1311

- 4PCS 7" Snap Ring Plier With Dipped Handle(Internal,External)
- 4PCS 6" Snap Ring Plier With Rubber Handle(Internal,External)
- 4PCS 7" Snap Ring Plier With Rubber Handle(Internal,External)

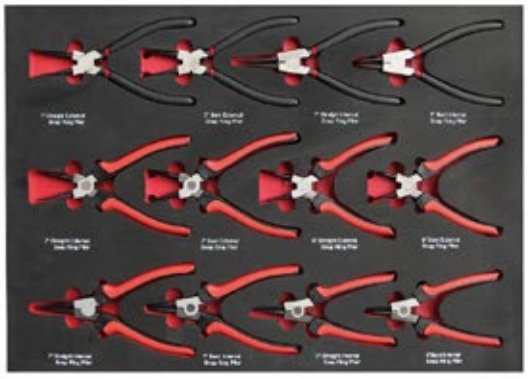

TBRT1313

- 1PC 8" Flat File
- 1PC 8"Half Round File
- 1PC 8"Round File
- 1PC 8"Triangul File
- 1PC Feeler Gauge
- 1PC Vernier Caliper
- 1PC LED Workinglamp 24 LEDS
- 1PC Measuring Tape 5 m
- 1PC Stainless Steel Straight Rule 30 cm
- 1PC Hacksaw Frame:12"
- 1PC Utility Knife
- 1PC American Type Tinman's Snip:8"

EVA Tools Tray

Value & Quality Tools You Can Trust

TBRT1310

- 1PC Big Head Diagonal Cutting Plier(European Type,Pearl Nickel plated): 7"
- 1PC Diagonal Cutting Plier(European Type,Pearl Nickel plated): 6"
- 1PC Long Nose Plier(European Type,Pearl Nickel plated): 6"
- 1PC Combination Plier(European Type,Pearl Nickel plated): 7"
- 1PC Water Pump Plier(European Type,Pearl Nickel plated) :10"
- 3PCS Aviation Snips: 10" Right, Left, Striangt
- 2PCS Curved Jaw Locking Plier:7", 10"
- 1PC Long Jaw Locking Plier CD Type: 9"

TBRT1312

- 1PC Heavy Duty Aluminum Spirit Level 400 mm
- 1PC Mini Degree Hook Tool
- 2PCS Scraper: 100 / 125 mm
- 1PC Mini Straight Pick Tool
- 1PC Radiator Hose Removel Tool
- 1PC 360° Rotatory Aluminum Hand Riveter
- 1PC Oil Filter Wrench
- 1PC Plastic Handle Steel Wire Brush
- 1PC PVC Pipe Cutter:35mm
- 4-Plades Scraper
- 1PC Wire Stripper Plier

TBRT1501

- 19PCS 1/2" DR. Sockets(CR-V): 8,9,10,11,12,13,14,15,16,17,18,19,20,21,22,24, 27,30,32 mm
- 15PCS 3/8" DR. Sockets(CR-V): 9,10,11,12,13,14,15,16,17,18,19,20,21,22,24 mm
- 13PCS 1/4" DR. Sockets(CR-V): 4,4.5,5,5.6,7,8,9,10,11,12,13,14 mm
- 21PCS 1/4" Bit Socket Set(CRV+S2): H3,H4,H5,H6,H7,H8 / T10,T15,T20,T25,T30, T40 / PH1,PH2,PH3 / SL4,SL5.5,SL7 / PZ1,PZ2,PZ3
- 8PCS 3/8" DR. TX Sockets(CRV): E8,E10,E11,E12,E14,E16,E18,E20
- 1PC 1/2" Three Joint: 10x12.5 mm
- 5PCS The Connecting Rod: 1/4"-4", 3/8"-3", 3/8"-6", 1/2"-5", 10"
- 3PCS Universal Joint:1/4", 3/8",1/2"
- 1PC 1/2" Connector Bits
- 1PC 1/4"Square Bar
- 1PC 1/4" Slider
- 3PCS Ratchet Handle 72 Teeth: 1/4", 3/8", 1/2"

TBRT1502

- 19PCS 1/2" DR.Sockets(CR-V): 8,9,10,11,12,13,14,15,16,17,18,19,20,21,22,24,27, 30,32 mm
- 10PCS 1/2" Long sleeve(CRV): 8,9,10,11,12,13,14,15,17,18 mm
- 10PCS 1/4" Series of Long Sleeve(CRV): 4,5,6,7,8,9,10,11,12,13 mm
- 13PCS1/4" Series of Short Sleeve(CRV): 4,4.5,5,5.5,6,7,8,9,10,11,12,13,14 mm
- 21PCS 1/4" Series of Pressure Distribution(CRV+S2): H3,H4,H5,H6,H7,H8 T10,T15,T20,T25,T30,T40 / PH1,PH2,PH3 / SL4,SL5.5,SL7 / PZ1,PZ2,PZ3
- 2PCS 1/2" Mars Sleeve: 16, 21 mm
- 1PCS 1/2" Three joint
- 5PCS The Connecting Rod: 1/4 "-2", 4 ", 6", 1/2"-5", 10"
- 2PCS Universal joint: 1/4 ", 1/2"
- 1PC The Retaining Ring: 1/2"
- 1PC 1/4" The Elastic Sleeve,
- 1PC 1/4" Connector AD,
- 1PC 1/4" Square Rod, Pole
- 2PCS Ratchet Handle 72 Teeth: 1/4", 1/2"
- 1PC 1/4" Swding bar

WORK GLOVES

NEW PRODUCT

PU DIPPED

CE Cat.II EN388 4131

TRY7001

Description
13G White Nylon Gloves,
With White PU On Palm

Features
- Breathable open back
- Excellent grip and touch
- Polyester liner is also available

Application
- Electrical factory
- Precision assembling
- Semiconductor
- Gardening
- General material handling
- Assembling, inspecting and packing small or delicate parts

N.W.:	7.1 Kgs
G.W.:	7.6 Kgs
QTY/CTN:	240 Pairs
Package Size:	580x260x340 mm
MOQ:	3000 Pairs
QTY/20'CY:	126240 Pairs

PU DIPPED

CE Cat.II EN388 4121

TRY7002

Description
13G Grey Nylon Gloves,
With Grey PU On Palm

Features
- Breathable open back
- Excellent grip and touch
- Polyester liner is also available

Application
- Electrical factory
- Precision assembling
- Semiconductor
- Gardening
- General material handling
- Assembling, inspecting and packing small or delicate parts

N.W.:	7.1 Kgs
G.W.:	7.6 Kgs
QTY/CTN:	240 Pairs
Package Size:	580x260x360 mm
MOQ:	3000 Pairs
QTY/20'CY:	126240 Pairs

PU DIPPED

CE Cat.II EN388 4121

TRY7003

Description
13G Black Nylon Gloves,
With Black PU On Palm

Features
- Breathable open back
- Excellent grip and touch
- Polyester liner is also available

Application
- Electrical factory
- Precision assembling
- Semiconductor
- Gardening
- General material handling
- Assembling, inspecting and packing small or delicate parts

N.W.:	7.1 Kgs
G.W.:	7.6 Kgs
QTY/CTN:	240 Pairs
Package Size:	580x260x340 mm
MOQ:	3000 Pairs
QTY/20'CY:	126240 Pairs

LATEX DIPPED

CE Cat.II EN388 2242

TRY7030

Description
10G grey polyester gloves, with blue crinkle latex dipping on palm

Features
- Breathable open back
- Good grip and slip resistance for wrinkle palm
- Water proof on palm

Application
- General maintenance
- General material handling
- Assembly application when handling small to medium abrasive parts
- Forestry, logging and lumber operations
- Refuse collection
- Working with and managing cables
- Heavy-duty handling of castings, cores and fabricated metals
- Handling of fabricated

N.W.:	12 Kgs
G.W.:	12.5Kgs
QTY/CTN:	100 Pairs
Package Size:	580X280X280 mm
MOQ:	3000 Pairs
QTY/20'CY:	59300 Pairs

LATEX DIPPED

CE Cat.II EN388 3121

TRY7031

Description
13G hi -viz yellow polyester gloves,with black crinkle latex dipping on palm

Features
- Breathable open back
- Easy and comfortable grip
- Water proof on palm
- Nylon shell is also available

Application
- General maintenance
- General material handling
- Assembly application when handling small to medium abrasive parts
- Forestry, logging and lumber operations
- Refuse collection
- Working with and managing cables
- Gardening
- Construction

N.W.:	9.6 Kgs
G.W.:	10.1 Kgs
QTY/CTN:	144 Pairs
Package Size:	600X260X250 mm
MOQ:	3000 Pairs
QTY/20'CY:	99648 Pairs

WORK GLOVES

NEW PRODUCT

NITRILE DIPPED

CE Cat.II EN388 4121

TRY7035

Description
13G white polyester gloves, with grey smooth nitrile dipping on palm

Features
- Excellent grip on palm
- Elastic,comfortable, washable
- Nylon shell is also available

Application
- Engine and transmission assembly
- General plant maintenance work
- Light metal fabrication
- Machine shops

N.W.:	7.1 Kgs
G.W.:	7.6 Kgs
QTY/CTN:	144 Pairs
Package Size:	420x260x360 mm
MOQ:	3000 Pairs
QTY/20'CY:	98784 Pairs

NITRILE DIPPED

CE Cat.II EN388 4121

TRY7036

Description
13G grey polyester gloves, with black unbreathable foam nitrile dipping on palm

Features
- Fits hands well and very comfortable
- Excellent abrasion and grip in wet and heavy oily condition
- Polyester shell is also available

Application
- Oily industry
- Final assembly areas
- General material handling
- Assembling, inspecting and packing small or delicate parts
- Assembly and handling of nuts, bolts and screws
- Shipping and receiving-handling cartons and packaging
- Truck driving, forklift and crane operation
- Electrical component assembly and installation
- Carpentry, drywall, roofng

N.W.:	8 Kgs
G.W.:	9 Kgs
QTY/CTN:	240 Pairs
Package Size:	600x260x380 mm
MOQ:	3000 Pairs
QTY/20'CY:	109200 Pairs

CUT PROTECTION

CE Cat.II EN388 4343

TRY7007

Description
13G CE cut level 3 gloves, with black PU dipping on palm with bigger thumb crotch reinforcement

Features
- Soft and comfortable cut resistant shell
- Coating with PU feels light and fit hands well
- Protection hands from sharp hazard

Application
- Refuse collection
- General material handling
- Handling abrasive or sharp-edged building materials
- Sheet metal handling and fnishing
- Handling heavy metals and trimming/cutting plastic, carpet and cardboard
- Final assembly areas

N.W.:	6.3 Kgs
G.W.:	6.8 Kgs
QTY/CTN:	72 Pair
Package Size:	340X280X240 mm
MOQ:	3000 Pairs
QTY/20'CY:	85032 Pairs

CUT PROTECTION

CE Cat.II EN388 4542

TRY7008

Description
13G CE cut level 5 gloves,with grey PU dipping on palm

Features
- Soft and comfortable cut resistant shell
- Coating with PU feels light and fit hands well
- Protection hands from sharp hazard

Application
- Refuse collection
- General material handling
- Handling abrasive or sharp-edged building materials
- Sheet metal handling and fnishing
- Handling heavy metals and trimming/cutting plastic, carpet and cardboard
- Bottling and glass handling
- Final assembly areas

N.W.:	4.9 Kgs
G.W.:	5.4Kgs
QTY/CTN:	72 Pair
Package Size:	340X280X240 mm
MOQ:	3000 Pairs
QTY/20'CY:	85032 Pairs

HEAVY DUTY PURPOSE

CE Cat.II EN388 4343

TRY7028

Description
13G hi-viz green CE cut 3 shell,with black sandy nitrile coating on palm, TPR sewing on glove back, reinforcement between thumb and index,Padded palm, Hook & loop wrist

Features
- HPPE shell provides excellent cutprotection, cut resistant level 3
- Sandy nitrile dipping on the palmprovides oil resistance and gripping power under wet condition
- Separate TPR pads on glove back and fngers to shield impacts to the back of the hand and fngers and make more flexible and comfortable
- Reinforced thumb crotch provides dependable protection

Application
- Gas & Oil industry
- Offshore exploration
- Rescure work
- Heavy duty impact
- Construction
- Metal fabrication
- Mechanical workshop
- Automobile
- Hand and power tool usage
- Small to medium scale metal stamping

N.W.:	15.9 Kgs
G.W.:	16.4 Kgs
QTY/CTN:	72 Pairs
Package Size:	440x300x480 mm
MOQ:	3000 Pairs
QTY/20'CY:	30672 Pairs

HEAVY DUTY PURPOSE

CE Cat.II EN388 4131

TRY7009

Description
13G gauee Dolyester shell Balck Sandy Nitrile coating on paim, Reunforcemnet between thumb and index, Padded paim Hook&loop wrist

Features
- Polyester shell feels flexible and comfortable
- Sandy nitrile dipping provides superior grip while working under oily and wet condition
- TPR pad helps prevent fnger pinching, abrasions and crushing injuries
- Shock and vibration resistant padded palm
- Reinforced thumb crotch strengthens critical wear point and extends service life
- Hook and loop wrist closure ensures a snug fit

Application
- Gas & Oil industry
- Offshore exploration
- Rescure work
- Heavy duty impact
- Construction
- Metal fabrication
- Mechanical workshop
- Automobile
- Hand and power tool usage
- Small to medium scale metal stampin

N.W.:	15.9 Kgs
G.W.:	16.4 Kgs
QTY/CTN:	72 Pairs
Package Size:	440x300x480 mm
MOQ:	3000 Pairs
QTY/20'CY:	30672 Pairs

WORK GLOVES

NEW PRODUCT

XTREME COLD

CE Cat.II EN388 2421 EN511 X2X

TRY7024

Description
Two layers Winter gloves: Outer 13G hi-viz orange polyester liner,inner 7G hi-viz orange terry brushed liner,with grey smooth latex fully dipping and second black sandy latex dipped on palm and thumb

Features
- Fits hands well and very comfortable
- Excellent abrasion and grip in wet and oily condition

Application
- General material handling
- Outdoor construction work
- Oily industry
- Automotive assembly
- Forestry, logging and lumber operations
- Janitorial and general plant maintenance work
- Shipping and receiving - handling cartons and packaging
- Carpentry, drywall, roofng

N.W.:	12.5 Kgs
G.W.:	13.1 Kgs
QTY/CTN:	60 Pairs
Package Size:	560X280X280 mm
MOQ:	3000 Pairs
QTY/20'CY:	36840 Pairs

XTREME COLD

CE Cat.II EN388 1242 EN511 X2X

TRY7025

Description
7G hi-viz orange terry brushed liner with black foam latex dipping on palm thumb

Features
- Brushed inside keeps warm
- Breathable in open back
- Soft and comfortable grip

Application
- Refuse collection (High-visibility)
- General maintenance
- Forestry, logging and lumber operations
- Cold storage and unheated warehouses
- Handling chilled or refrigerated products
- Patrolling unheated premises
- Outdoor construction work
- Transportation

N.W.:	14.3 Kgs
G.W.:	15 Kgs
QTY/CTN:	100 Pairs
Package Size:	600X280X250 mm
MOQ:	3000 Pairs
QTY/20'CY:	42200 Pairs

XTREME COLD

CE Cat.II EN388 3132 EN511 X1X

TRY7026

Description
10G hi-viz yellow acrylic brushed liner with black crinkle latex dipping on palm

Features
- Protection against cold
- Fine grip and slip resistance
- Water proof on palm

Application
- Refuse collection (High-visibility)
- General maintenance
- Forestry, logging and lumber operations
- Outdoor construction work
- Transportation

N.W.:	8.1 Kgs
G.W.:	8.7 Kgs
QTY/CTN:	60 Pairs
Package Size:	560x280x240 mm
MOQ:	3000 Pairs
QTY/20'CY:	43020 Pairs

Ecological Environment Protection

CE Cat.II EN388 4131

TRY7014

Description
15G grey nylon with spandex gloves, with black micro foam nitrile dipping on palm

Features
- Super comfortable
- Breathable coating keeps hands ultra cool and dry
- Resistant against oil

Application
- Final assembly areas
- General material handling
- Assembling, inspecting and packing small or delicate parts
- Assembly and handling of nuts, bolts and screws
- Shipping and receiving-handling cartons and packaging
- Truck driving, forklift and crane operation
- Electrical component assembly and installation
- Carpentry, drywall, roofng

N.W.:	6.4 Kgs
G.W.:	6.9 Kgs
QTY/CTN:	120 Pairs
Package Size:	600x300x260 mm
MOQ:	3000 Pairs
QTY/20'CY:	69120 Pairs

Ecological Environment Protection

CE Cat.II EN388 3232

TRY7015

Description
15G grey nylon with spandex gloves, with black micro foam nitrile dipping on palm, black nitrile dots palm

Features
- Super comfortable, ft hands like a second skin
- Breathable coating keeps hands ultra cool and dry, prevention of fatigue
- Nitrile dots gives better anti skidding in oily and wet conditions

Application
- Final assembly areas
- General material handling
- Assembling, inspecting and packing small or delicate parts
- Assembly and handling of nuts, bolts and screws
- Shipping and receiving-handling cartons and packaging
- Truck driving, forklift and crane operation
- Electrical component assembly and installation
- Carpentry, drywall, roofng

N.W.:	6.4 Kgs
G.W.:	6.9 Kgs
QTY/CTN:	120 Pairs
Package Size:	600x300x240 mm
MOQ:	3000 Pairs
QTY/20'CY:	75000 Pairs

Ecological Environment Protection

CE Cat.II EN388 4231

TRY7016

Description
13G grey nylon with spandex gloves, with black single sandy nitrile dipping on palm

Features
- Bright visual effect to avoid visual fatigue
- Fine grip on palm
- Comfortable, washable
- Any color for both liner and coating are available

Application
- Oily industry
- Final assembly areas
- General material handling
- Assembling, inspecting and packing small or delicate parts
- Assembly and handling of nuts, bolts and screws
- Shipping and receiving-handling cartons and packaging
- Truck driving, forklift and crane operation
- Electrical component assembly and installation
- Carpentry, drywall, roofng

N.W.:	6.4 Kgs
G.W.:	6.9 Kgs
QTY/CTN:	120 Pairs
Package Size:	600x300x260 mm
MOQ:	3000 Pairs
QTY/20'CY:	69120 Pairs

ATV/Motorcycle Jack

T66803
680 Kgs

Model:	T66803	T66751-CE(T64001G)	T66751(T66801G)
Capacity:	680 kgs	400 kgs	680 kgs
Min.Height:	120 mm	140 mm	140 mm
Max.Height:	380mm	430 mm	430 mm
N.W.:	27.3 kgs	36.2 kgs	35.7 kgs
G.W.:	28.5 kgs	37.9 kg s	37.8 kgs
Package Size:	830x380x130 mm	920x440x155 mm	920x440x155 mm
QTY/20'CY:	538 pcs	450PCS	420 pcs

T66751-CE
(T64001G)
400 Kgs

T66751
(T66801G)
680 Kgs

Model:	TRE5154C-Q	TRE5154C-J
Capacity:	680 kgs	680 kgs
Min.Height:	120mm	120 mm
Max.Height:	400 mm	400 mm
N.W.:	31.5 kgs	29 kgs
G.W.:	33.5 kgs	31 kgs
Package Size:	850x410x150 mm	850x410x150 mm
QTY/20'CY:	50 PCS	50PCS

TRE5154C-J
680 Kgs

PNEUMATIC

TRE5154C-Q
680 Kgs

TRE61353-2
135 Kgs

Model:	TRE61353-2
Capacity:	135 kgs
Tabel size:	430x360 mm
Min.Height:	340 mm
Max.Height:	890 mm
N.W.:	28.5 kgs
G.W.:	31 kgs
Package Size:	495x450x380 mm
QTY/20'CY:	170 PCS

www.tongrunjacks.com

Motorcycle Lift

Model:	TRM01110
Capacity:	500 kgs
Lifting Height:	370 mm
N.W.:	50.0 kgs
G.W.:	110.0 kgs
Package Size:	950x950x1250 mm
QTY/20'CY:	2 PCS
MOQ:	100 PCS

NEW PRODUCT

TRM01110
500 Kgs

Model:	TRM01109
Capacity:	500 kgs
Stock:	470 mm
Lifting Height:	470 mm
N.W.:	48.0 kgs
G.W.:	53.0 kgs
Package Size:	1200x550x390 mm
QTY/20'CY:	1 PC
MOQ:	100 PCS

TRM01109
500 Kgs

NEW PRODUCT

Motorcycle Lifting Table

Model:	TRE64007
Capacity:	360 kgs
Tabel size:	2170x490 mm
Min.Height:	220 mm
Max.Height:	780 mm
N.W.:	97.5 kgs
G.W.:	123.5 kgs
Package Size:	1510x670x260 mm
QTY/20'CY:	92 PCS

TRE64007
360 Kgs

CE

Lower Position

Foot Pump

www.tongrunjacks.com

Motorcycle Lifting Table

Model:	TRE64001
Capacity:	400 kgs
Table Size:	2540x685 mm
Min.Height:	180 mm
Max.Height:	760mm
N.W.:	122 kgs
G.W.:	157 kgs
Package Size:	2280x770x300 mm
QTY/20'CY:	45 PCS

TRE64001
400 Kgs

CE

CE

TRE64007C
450 Kgs

Model:	TRE64007C
Capacity:	450 kgs
Tabel size:	2170x490 mm
Min.Height:	195 mm
Max.Height:	780 mm
N.W.:	123 kgs
G.W.:	150 kgs
Package Size:	1900x750x390 mm
QTY/20'CY:	50 PCS

CE

TRE64502
450 Kgs

Model:	TRE64502
Capacity:	450 kgs
Table size:	2200x680 mm
Min.Height:	180 mm
Max.Height:	780 mm
N.W.:	141 kgs
G.W.:	179 kgs
Package Size:	2280x730x280 mm
QTY/20'CY:	56 PCS

Motorcycle Lifting Table

Model:	TRE04102
Capacity:	450 kgs
Table Size :	2100x610 mm
Min.Height:	180 mm
Max.Height:	780 mm
N.W.:	125 kgs
G.W.:	152 kgs
Package Size:	2210x680x280 mm
QTY/20'CY:	64 PCS

TRE04102
450 Kgs

PNEUMATIC

TRE64501
450 Kgs

Model	TRE64501
Capacity:	450 kgs
Table size:	2460x1220 mm
Min.Height:	190 mm
Max.Height:	840 mm
N.W.:	220 kgs
G.W.:	250 kgs
Package Size:	2190x670x320 mm
QTY/20'CY:	48 PCS

Model:	TRE04152Q-J
Capacity:	1500 kgs
Table Size :	1950x1220 mm
Min.Height:	180 mm
Max.Height:	830 mm
N.W.:	222 kgs
G.W.:	252 kgs
Package Size:	2040x790x350 mm
QTY/20'CY:	52 PCS

TRE04152Q-J
680 Kgs

www.tongrunjacks.com

Motorcycle Lifting Table

PNEUMATIC

TRE66805
680 Kgs

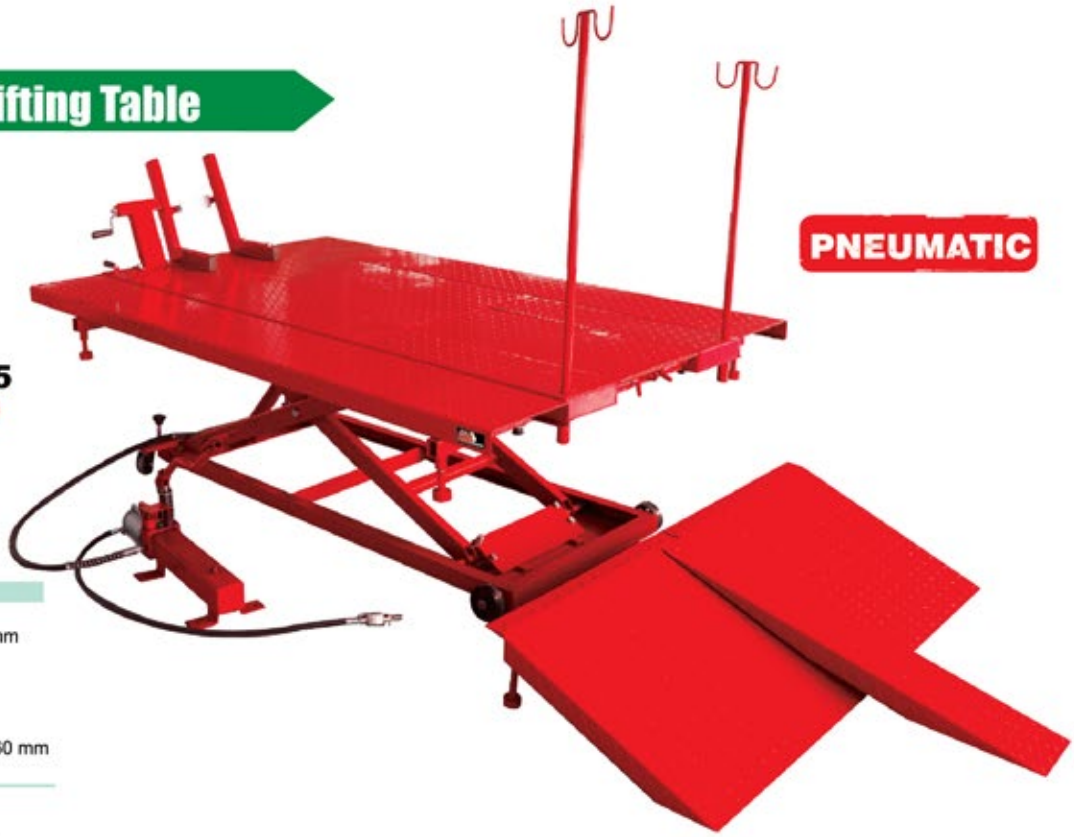

Model	TRE66805
Capacity:	680 kgs
Table size:	1950x1220 mm
Min.Height:	180 mm
Max.Height:	830 mm
N.W.:	260 kgs
G.W.:	294 kgs
Package Size:	2040x940x360 mm
QTY/20'CY:	36 PCS

All Lifts Include Removable Side Platforms for ATV's

Model:	TRE04152
Capacity:	680 kgs
Table Size :	1# 1950x1220 mm 2# 580x1220 mm
Min.Height:	180 mm
Max.Height:	830 mm
N.W.:	1# 220 kgs 2# 35 kgs
G.W.:	1# 245 kgs 2# 41 kgs
Package Size:	1# 2040x790x350 mm 2#330x270x800 mm
QTY/20'CY:	41 PCS

TRE04152
680 Kgs

← **Electric Power Unit**

NEW PRODUCT

Model	TRE04107
Capacity:	1000 kgs
Table size:	2000x600 mm
Min.Height:	190 mm
Max.Height:	930 mm
N.W.:	130 kgs
G.W.:	160 kgs
Package Size:	2050x650x300 mm
QTY/20'CY:	64 PCS

Electric Power Unit →

TRE04107
1000 Kgs

www.tongrunjacks.com

Motorcycle Lift

NEW PRODUCT

TRE01108
450 Kgs

Model:	TRE01108
Capacity:	450 kgs
Platform size:	680x360 mm
Min.Height:	110 mm
Max.Height:	400 mm
N.W.:	23 kgs
G.W.:	25 kgs
Package Size:	810x530x135 mm
QTY/20'CY:	450 PCS

Motorcycle Support Stand

Model	Capacity (kgs)	N.W. (kgs)	G.W. (kgs)	Package Size (mm)	QTY/CTN (PCS)	QTY/20'CY (PCS)
TRF45501	100	6	6.8	800x480x400	6	900
TRF45502	200	10	11	880x570x430	6	780
TRMT016	200	6	6.5	640x470x90	1	1200
TRMT005	250	5	5.2	/	/	700
TRMT014	200	4.8	5.2	640x380x90	1	1300

www.tongrunjacks.com

Motorcycle Support Stand

NEW PRODUCT

Movable Type

TRMT03001
340 Kgs

TRMT020
300 Kgs

TRMT008
150 Kgs

TRMT009
200 Kgs

Model:	TRMT03001	TRMT020	TRMT008	TRMT009
Capacity:	340	300 kgs	150 kgs	200 kgs
N.W.:	10	15.2kgs	5.0 ckgs	7.5 kgs
G.W.:	10.5	18.5 kgs	5.3kgs	8.0 kgs
Package Size:	610x460x85	780x635x460 mm	750x260x100 mm	680x320x260 mm
QTY/20'CY:	1400	210 PCS	2000 PCS	500 PCS

TRT4001
106 Kgs

Aluminum

Model:	TRMT007
Capacity:	150 kgs
N.W.:	9.5 kgs
G.W.:	10.2 kgs
Package Size:	620x440x90mm
QTY/20'CY:	1200 PCS

Model:	TRT4001
Capacity:	106 Kgs
Height Min.:	320 mm
Height Max.:	400 mm
Tabel Size:	170x260 mm
N.W.:	7.5 kgs
G.W.:	7 kgs
Package Size:	320x320x320 mm
QTY/20'CY:	870 PCS

TRMT007
150 Kgs

Motorcycle Stand

Model:	TRMT006
Capacity:	150 kgs
N.W.:	6.3 kgs
G.W.:	6.6 kgs
Package Size:	370X320X290 mm
QTY/20'CY:	540 PCS

TRMT006
150 Kgs

www.tongrunjacks.com

Motorcycle Parking Stand

Model:	TRMT028	TRMT060
Capacity:	300 kgs	300 kgs
N.W.:	10.5 kgs	8.0
G.W.:	11.5 kgs	9.2
Package Size:	640x540x160 mm	560x530x125 mm
QTY/20'CY:	460 PCS	750 PCS
MOQ:	50 PCS	—

TRMT028
300 Kgs

TRMT060
300 Kgs

Motorcycle Lifting Jack

Model:	TRE4101
Capacity:	450 kgs
Min.Height:	100 mm
Max.Height:	340 mm
N.W.	15 kgs
G.W.:	16 kgs
Package Size:	530x180x170 mm
QTY/20'CY:	1250 PCS

TRE4101
450 Kgs

Model:	TRE3001
Capacity:	500 kgs
Min.Height:	90 mm
Max.Height:	405 mm
N.W.	14 kgs
G.W.:	15 kgs
Package Size:	520x340x135 mm
QTY/20'CY:	1430 PCS

TRE3001
500 Kgs

Motorcycle Dolly

TRMT2211
600 Kgs

Model:	TRE2211
Capacity:	600 kgs
Overall dimension:	2800x730x70 mm
Package Size:	1030x300x115 mm
N.W.:	47 kgs
G.W.:	49 kgs
QTY/20'CY:	430 PCS

NEW PRODUCT

TRE04806
1500 Kgs

Model:	TRE04806
Capacity:	1500 kgs
PRODUCT SIZE:	2500x900x260 mm
Package Size:	950x630x100 mm
N.W.:	42 kgs
G.W.:	43 kgs
QTY/20'CY:	460 PCS

www.tongrunjacks.com

QUALITY APPROVAL AND CERTIFICATION

The quality of Tongrun's products has met the standars and the speculations of ASME of USA, BS of England, DIN of Germany, AS of Australia, JIS of Japan, and the speculations and standards of some other countries. Tongrun's products have also been certified with GS and CE issued by TUV of Germany.

ISO/TS 16949

ISO 14001:2004

ISO 9001

GS CERTIFICATE
CE CERTIFICATE

Test Lab

Assembly Line

Automatic Welding Line

WE STAND BY OUR PRODUCT

TORIN INC (LA)

TORIN INC (Detroit)

TORIN INC(France)

TORIN INC(Mexico)

TORIN INC(Hamburg)

TORIN INC(India)

TORIN INC(Thailand)

Copyright are reserved to Changshu Tongrun Auto Accessory Co., Ltd any/or person cannot copy, unless agreed by its owner, or the owner will investigate the legal liability. We are not intend to infringe anybody's copyright, if so, please contact with us at once, we will correct it.

CHANGSHU TONGRUN AUTO ACCESSORY CO, LTD

New Long Teng Industry Area, Changshu Economy
Development Zone, Changshu, Jiangsu, China

Tel: (86-512)52343388 Fax: (86-512)52343399
Http:// www.tongrunjacks.com
E-mail: Admin@tongrun.com

@ Jan. 2017, TONGRUN Companies