Model No.	FYL-1804UBC1A
Date / Rev.	2021.06.04 / B

PRODUCT SPECIFICATION

Model No.：FYL-1804UBC1A

Descriptions:
■Dice material: InGaN.
■Emitting Color: Super Bright Blue.
■Device Outline: Φ1.8mm nipple type.
■Lens Type: Water clear.

CUSTOMER APPROVED SIGNATURES	APPROVED BY	CHECKED BY	PREPARED BY

NINGBO FORYARD OPTOELECTRONICS CO.,LTD.

Add: No. 666 Jinghua Road, Hi-tech Park, Ningbo, Zhejiang, China **Zip:**315103

Tel: 0086-574-87933652 87922206 87927870

Fax: 0086-574-87927917

E-mail: Sales@foryard.com (General)

Model No.: FYL-1804UBC1A

Features

1.Low power consumption.

2.High efficiency.

3.General purpose leads.

4.High intensity.

5.RoHs compliant.

Package configuration

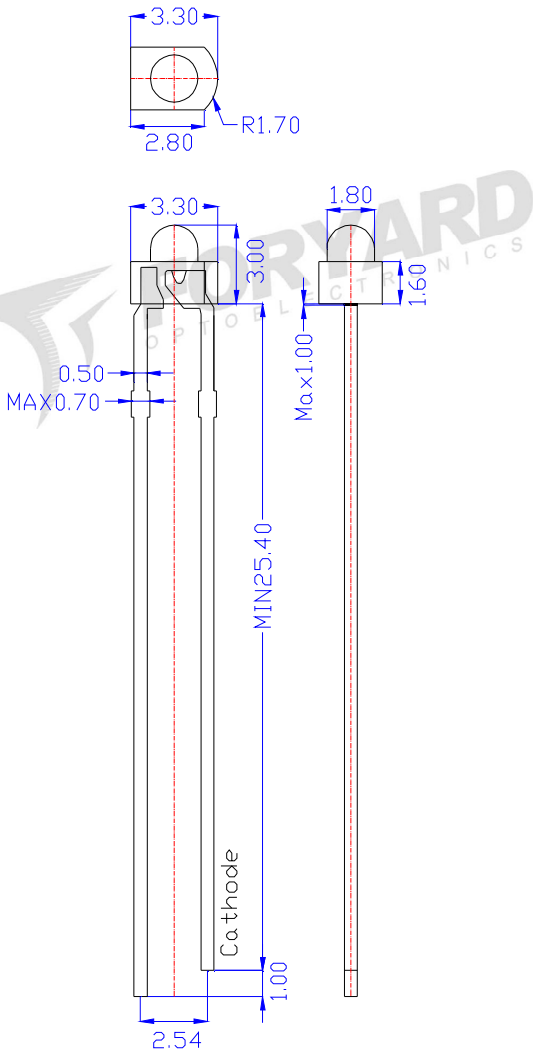

Notes:

1. All dimensions are millimeters (inches)
2. Tolerance is ±0.25mm(.010”) unless otherwise noted.
3. The specifications, characteristics and technical data described in the datasheet are subject to change without prior notice.
4. The drawing is different from the actual one, please refer to the sample.

Model No.: FYL-1804UBC1A

■ Absolute Maximun Ratings(Ta=25ºC)

Parameter	MAX.	Unit
Power Dissipation	100	mW
Peak Forward Current (1/10 Duty Cycle, 0.1ms Pulse Width)	100	mA
Continuous Forward Current	30	mA
Derating Linear From 50℃	0.4	mA/℃
Reverse Voltage	5	V
Operating Temperature Range	-40℃ to +85℃	
Storage Temperature Range	-40℃ to +100℃	
Lead Soldering Temperature[4mm(.157") From Body]	260℃ for 5 Seconds	

■ Typical Electrical &Optical Charcteristics(Ta=25ºC)

Parameter	Symbol	Min.	Typ.	Max.	Unit	Test Condition
Luminous Intensity	I_V	4750	7500	10800	mcd	IF=20mA
Viewing Angle	$2\theta_{1/2}$	---	30	---	Deg	
Peak Emission Wavelength	λp	---	470	--	nm	
Dominant Wavelength	λd	461	467	473	nm	
Spectral Line Half-Width	△λ	---	30	--	nm	
Forward Voltage	V_F	2.6	3	3.4	V	
Reverse Current	I_R	---	---	10	μA	VR=5V

Note:

1.Luminous Intensity is based on the Foryard standards.

2.Pay attention about static for InGaN

Model No.: FYL-1804UBC1A

■ Typical Eletrical/Optical Characteristics Curves(Ta=25ºC Unless Otherwise Noted)

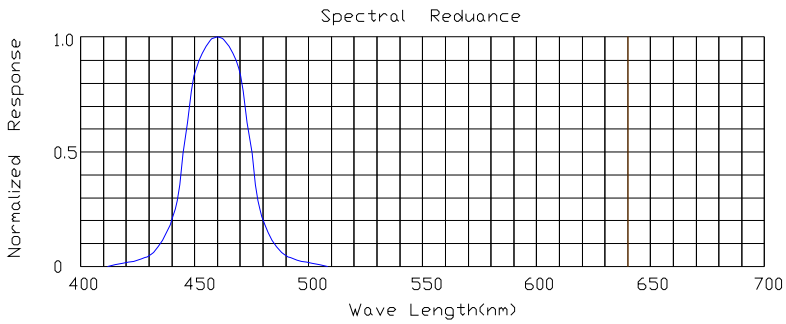

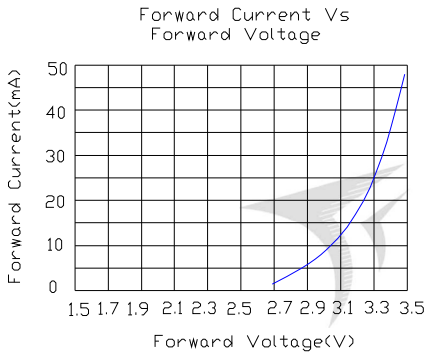

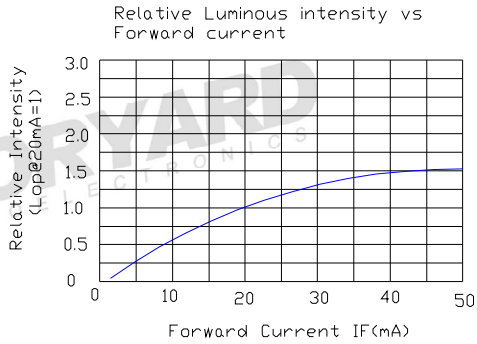

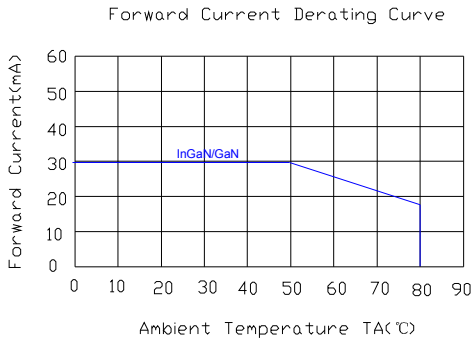

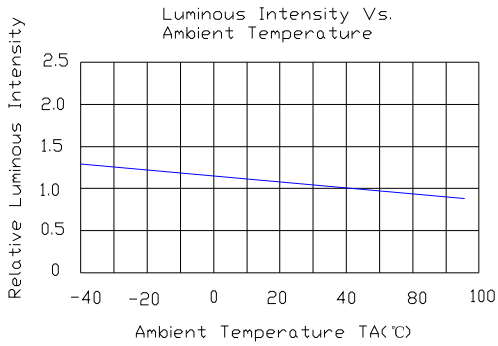

■ Radiation pattern

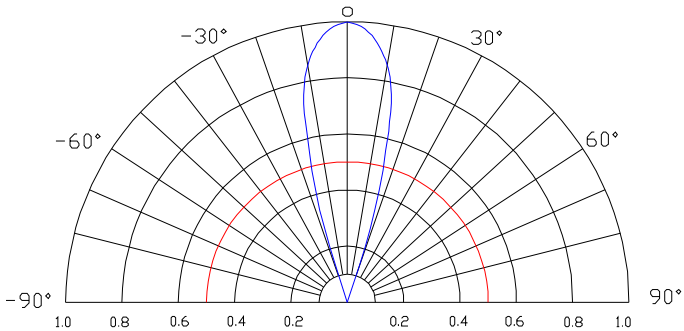

Relative Lumionous Intensity(LOP @max=1)

Model No.: FYL-1804UBC1A

■ LAMP PACKING.

1.8mm 1000PCS/Polybag

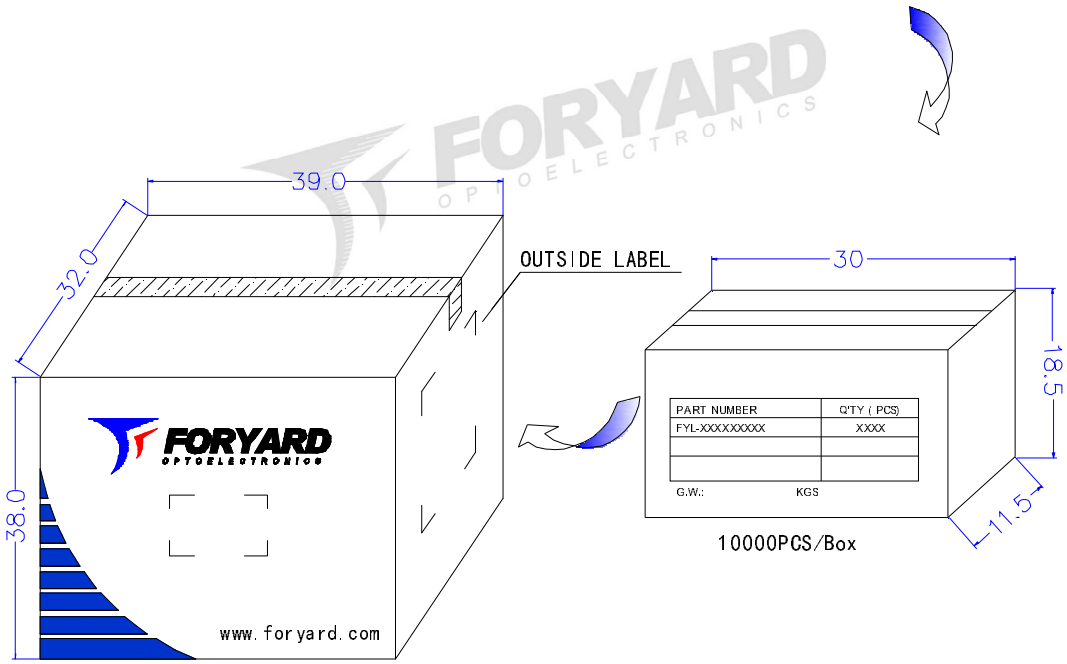

60000PCS/Carton

10000PCS/Box

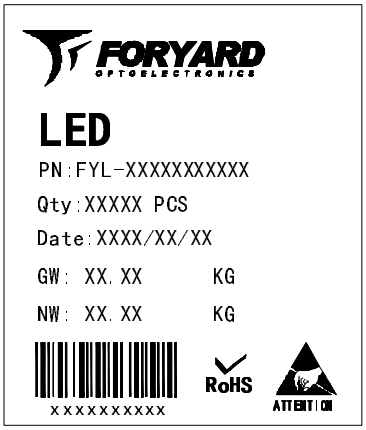

OUTSIDE LABEL

Note: The specifications are subject to change without notice. Please contact us for updated information.