Datasheet of Wireless Bio-Radar Sensor for Sleep Monitoring IR24SMA

DALIAN IFLABEL TECHNOLOGY CO., LTD.

Specification

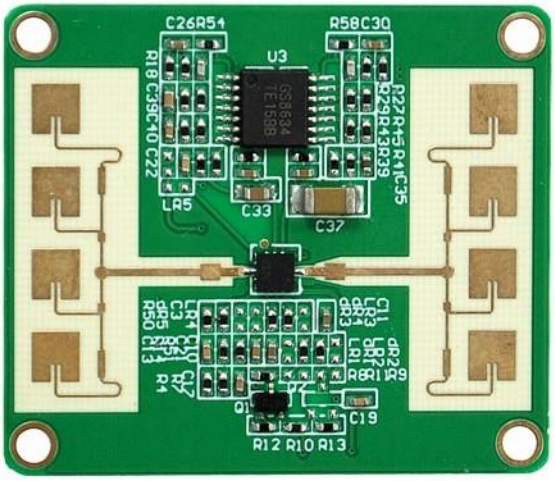

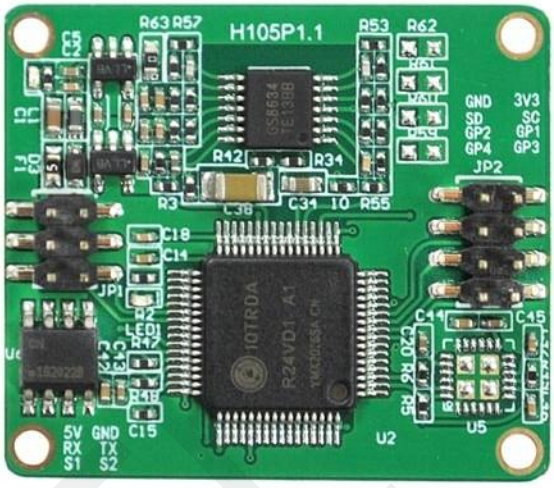

Model	**Standard**
Description	**Wireless Bio-Radar Sensor for Sleep Monitoring**
Part Number	**IR24SMA**
Date	**2021/03/19**
Version	**1.1**

	Design Team		
	Approval	**Check**	**Edit**
	刘宝玉印	温之馨印	刘之昭印

R.1513, Zhongnan Building Block A, NO.18 Zhonghua W. Rd, Ganjingzi Dist, Dalian

Tel: +86-411-84619565

Email: info@iflabel.com

Site:www.iflabel.com

Contents

IFLABEL

Overview

This document mainly describes the use of the radar and the problems needing attention in each stage, so as to reduce the design cost and increase the stability of the product as much as possible and improve the completion efficiency of the project.

From the hardware circuit reference design, the layout requirements of radar antenna and shell, how to distinguish interference and multifunctional standard UART protocol output.

The radar is a self-contained space sensing sensor, which is a module composed of RF antenna, radar chip and high-speed main frequency MCU. Relying on the stable, flexible and superior algorithm architecture core, the radar can solve the user's various scene detection needs. It can be equipped with upper computer or host computer to flexibly output detection status and data, meet several groups of GPIO, and can be customized and developed by users.

1. Operating Principle

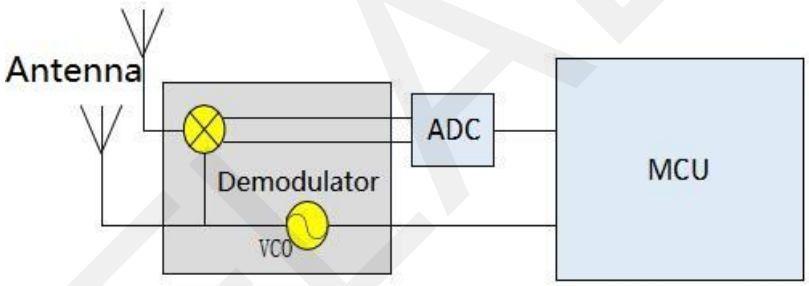

The radar transmits 24G band millimeter wave signal, the measured target reflects electromagnetic wave signal, demodulates the transmitted signal, and then obtains echo demodulated signal data through amplification, filtering, ADC and other processing. The amplitude, frequency and phase of echo signal are solved in MCU unit, and finally the measurement of target parameters (breathing, motion, micro motion, etc.) and scene evaluation are realized.

2. Precautions for Hardware Design

The rated power supply voltage of the radar shall meet 4.9 - 6V.

Under normal working conditions, the rated current requires an input of more than 200mA. Power supply design, power ripple shall be ≤ 100mV.

2.1. Circuit for Reference of Power Supply Design

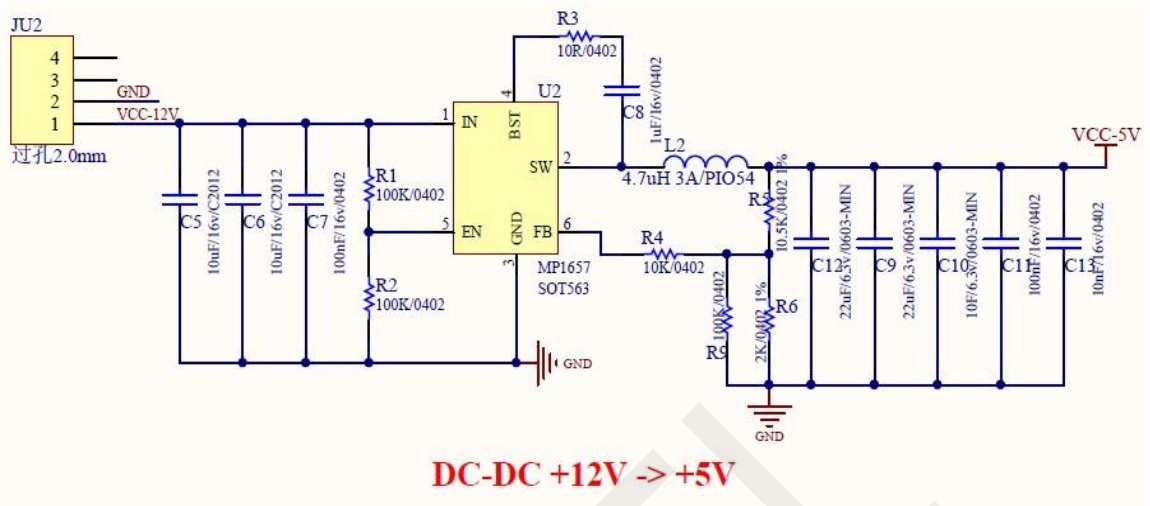

Figure 1

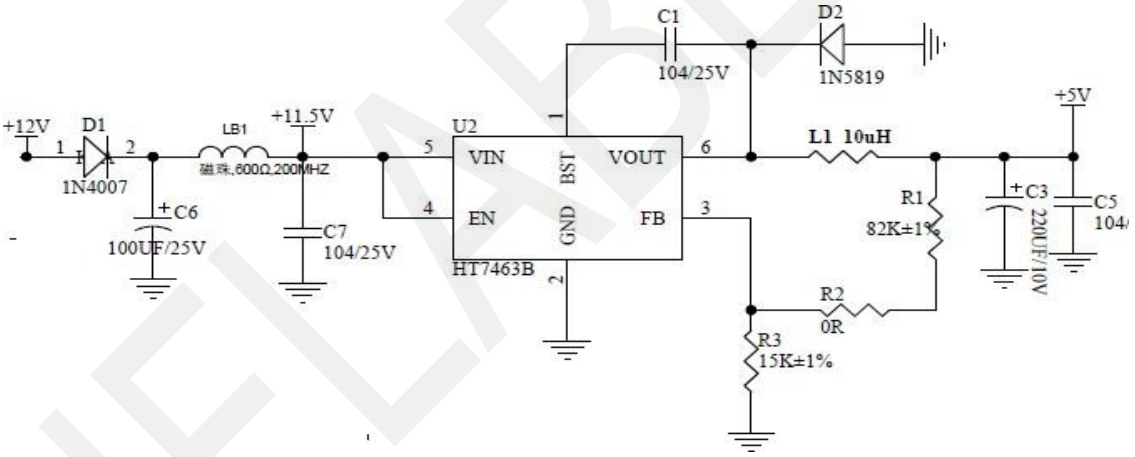

Figure 2

2.2. Wiring Diagram

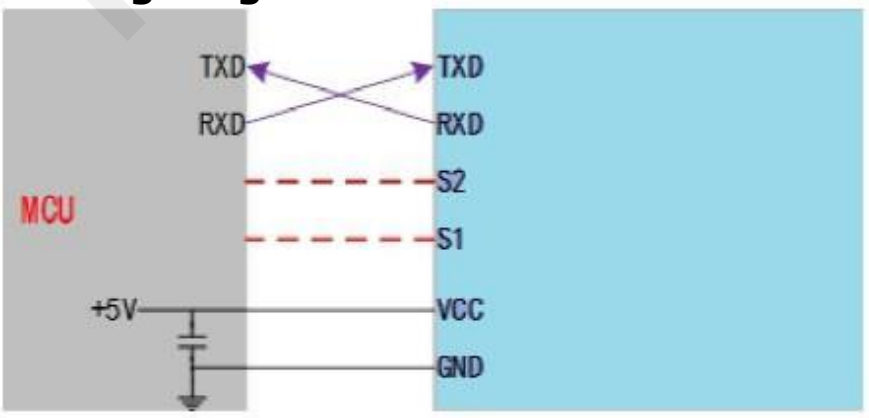

Figure 3. Wiring Diagram of Radar Module and Peripheral Device

3. Layout Requirements of Antenna and Case

PCBA：Height of Radar Mount Above Other Components≥ 1mm

Case Structure：Radar Antenna Plane to Case: 2 - 5mm

External Detection Surface：Non-metallic plane, no curve to avoid affection on performance of detection coverage

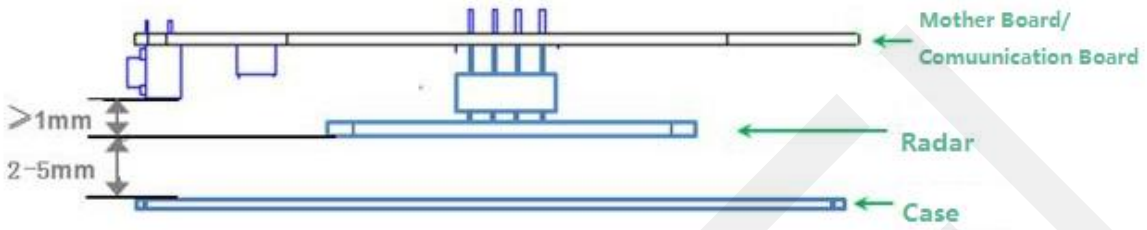

Figure 4

4. Electrostatic Protection

The radar product has an electrostatic sensitive circuit inside, which is vulnerable to electrostatic hazards. Therefore, it is necessary to do a good job in electrostatic protection in the process of transportation, storage, work and taking. Do not touch and grasp the antenna surface and connector pins of the radar module, but only the corners.

When operating the radar sensor, please wear anti-static gloves.

5. Factors Interfering Radar Function

5.1 Abnormal Output of Nobody State

Under normal circumstances, radar will accurately judge states of human body sitting down/sleeping ,respiration and other vital signs.

A. Movements from doorway, the other side of wooden wall detected due to too large radar scanning coverage

Adjustment：Tune down sensitivity and set up scenario for radar

B. Radar faces down air-conditioning, fan in operating
Adjustment：Readjust the position of radar

C. Swinging objects by airflow from air-conditioning
Adjustment：Cotton, non-metallic objects will not cause false-alarm and metallic objects need to be fixed

D. False alarm by Vibration of Radar not fixed

Adjustment：Avoid shaking or vibration

E. Pets, flying birds or other moving objects
Adjustment：Because of the high sensitivity of slight motion detection, this cannot be excluded

F. False judgement from interference of power supply
Adjustment：Stabilize the current and reduce ripple

5.2 Abnormal Output of Somebody State

Radar judges human presence via sending and receiving electromagnet wave, closer to radar, higher the accuracy

A. Human body beyond radar scanning coverage
Adjustment：Readjust the installation angle.
Detection range varies slightly in different environments due to different reflection coverage

B. False output due to shading by metallic objects
Too thick office desks, chairs made from metal will block electromagnet wave and cause a false alarm

C. Difference in scanning angle
Adjustment：Human body not scanned by radar, causing a false alarm

D. Low sensitivity of radar
Adjustment：Use parameter condition of radar to improve

6. Functions

6.1. Description of Functions

Function Points	Time of State Change/Explanation
DP1：somebody/nobody	nobody to somebody, report within 0.5s somebody to nobody, output "No" in 1to 2mins
DP2：stationary/active	shift between stationary and active, report within 0.5s
DP3：personnel approaching/leaving/no directional movement	output every 2s
DP4：parameter of body motion amplitude from 0 – 100	output every 5s refer to（section 6.2)
DP5：sensitivity gear from 0 – 9	10 gears for default scenario
DP7：scenario（bed,bathroom,hotel,bedroom,office,default）	different scenarios according to size of coverage
DP8：confirm reminder of false alarm of nobody	
DP9：in bed/out of bed	output within 3S
DP10：in bed/out of bed times	Record how many times in bed/out of
DP11：Sleep Quality Evaluation	Three states, output every 10 min
DP12：Awake Duration	
DP13：Light Sleep Duration	
DP14：Deep Sleep Duration	
DP15：Respiratory Rate	Monitor normal respiratory rate
DP16：Respiratory Rate Detecting Signal	Output factors like distance, range and etc
DP16：Score of Sleep（Optional. Users can define depending on will）	Evaluate based on the data your sleep quality with scores

IFLABEL

6.2. Output Description of Body Motion Amplitude Parameters

Parameter of Body Motion Amplitude		
0%	nobody	nobody in environment
1%	stationary（sleep）	no body movement only respiration
2%-30%	slight motion	slight motion from head or limbs
31%-60%	walk/quick body movement	relatively slow body movement
61%-100%	run/big movement in close distance	quick body movement

7. Instruction of Protocol

This protocol is applied to the communication between 24G millimeter wave detection radar and host computer.

This protocol briefly introduces the radar work flow, briefly introduces the composition architecture of the interface protocol, and gives the control commands and data required for relevant radar work. The definition of serial port communication is as follows:

Interface level：TTL

Baud rate：9600bps

Stop bit：1

Data bit：8

Parity check：No

IFLABEL

8. Communication Commands and Parameter Definition

8.1. Definition and Instruction of Frame Structure

A. Definition of Frame Structure

Initial Code	Data Length		Function Code	Address Code 1	Address Code 2	Data	Check Code	
0X55	Lenth_L	Lenth_H	Command	Address_1	Address_2	Data	Crc16_L	Crc16_H
1 Byte	1 Byte	1 Byte	1 Byte	1 Byte	1 Byte	n Byte	1 Byte	1 Byte

B. Instruction of Frame Structure

a. Initial code：1Byte, default 0X55

b. Data length：2 Byte, low byte first, high byte after

- length=data length+function code+address code 1+address code 2+data+check code

c. Function：1Byte

- Data read：0X01
- Data write：0X02
- Passive report command：0X03
- Active report command：0X04

d. Address：address code 1 function classify, address code 2 specific function

e. Please refer to instruction of address distribution and data information

f. Data：n Byte

g. Check code：2 Byte, low byte first, high byte after
Use CRC16 for check, please refer to Appendix 1

IFLABEL

8.2. Address Distribution and Data Information Instruction

Interface Contents of 24G Bio-perception Radar					
	Function code	Address code 1	Address code 2	Data	Remark
1	Read 0x01	Mark looking up 0x01	Device ID 0X01		
2			Software version 0x02		
3			Software version 0x03		
4			Protocol version 0x04		
5		Looking-up radar information 0x03	Environment state 0X05		
6			Vital sign parameter 0x06		
7		System parameter looking-up 0x04	Threshold gear 0x0C		
8			Scenario setting		
			0x10		
9		Look up for other information 0X05	Switch of parameters of sleep monitoring 0X0D		Look up for current state of switch of sleep monitoring

IFLABEL

Interface Contents of 24G Bio-perception Radar					
1	Write 0x02	System parameter 0x04	Threshold gear 0x0C	Enumeration range 0~9	Respectively to gear level 0 1 2 3 4 5 6 7 8 9 (default is 6) higher gear level, higher sensitivity
2			Scenario setting 0x10	Default mode 0x00	
3				Area detection (Top-mounted) 0x01	
4				Bathroom (Top-mounted) 0x02	
5				Bedroom (Top-mounted) 0x03	
6				Living room (Top-mounted) 0x04	
7				Office (Top-mounted) 0x05	
8				Hotel (Top-mounted) 0x06	
9		Other function 0X05	Restart 0X04		
			Switch of Sleep Monitoring 0x0D	OFF 0x00	
				ON 0x01	
10			OTA upgrade start 0X08	4byte integer data (firmware size) + nbyte (software version number)	
			Upgrade Transmission 0X09	Packet deviation (4byte) + Data packet (1024byte)	
			Upgrade complete information 0X0A	Fixed character 0X0F	

IFLABEL

Interface Contents of 24G Bio-perception Radar					
1	Passive report command 0x03	Report Radar information 0x01	Device ID	0x01	
2			Software version	0x02	
3			Hardware version	0x03	
4			Protocol version	0x04	

Interface Contents of 24G Bio-perception Radar					
1	Passive report command 0x03	Report Radar information 0X03	Environment sate 0x05	Nobody 00 FF FF	
2				Stationary personnel 01 00 FF	
3				Active personnel 01 01 01	
4			Vital parameters 0x06	4 Byte Float data See appendix 2	
5		Report system information 0X04	Threshold gear 0X0C	Current gear (0X00~0X09)	
6			Scenario setting 0x10	Default 0x00	
7				Area detection (Top-mounted) 0x01	
8				Bathroom (Top-mounted) 0x02	
9				Bedroom (Top-mounted) 0x03	
10				Living room (Top-mounted) 0x04	
11				Office (Top-mounted) 0x05	
12				Hotel (Top-mounted) 0x06	
13		Report other information 0X05	Switch of sleep monitoring 0X0D	OFF 0x00	
				ON 0x01	
14			OTA upgrade start 0X08	Fail 0X00	
15				Succeed 0X01	
16			OTA Upgrade Transmission 0X09	Fixed Character 0X0F	

IFLABEL

Interface Contents of 24G Bio-perception Radar						
1	Active report0X04	Report radar information 0x03	Environment state 0x05	Noboday 00 FF FF		
2				Stationary personnel 01 00 FF		
3				Active personnel 01 01 01		
4			Parameter of body motion 0X06	4 Byte Float data		
5			Approaching/Leaving 0x07	Fixed character 0x01 0x01	No 0x01	
					Approaching 0x02	
					Leaving 0x03	
6		Report other information 0X05	Heartbeat 0X01	Noboday 00 FF FF		
7				Stationary personnel 01 00 FF		
8				Active personnel 01 01 01		
9			Reset of abnormal 0X02	0X0F		

Interface Contents of 24G Bio-perception Radar					
1	Data report 0x05	Respiration parameter 0x01	Respiratory rate 0x01	1Byte integer data	
			Detecting signal 0x04	abnormal 0x01	
				no 0x02	
				Normal 0x03	
2		Scenario evaluation 0x03	In bed/out of bed 0x07	Out of bed 0x00	
3				In bed 0x01	
4			Sleep state evaluation 0x08	awake 0x00	
5				Light sleep 0x01	
6				Deep sleep 0x02	
7				No 0x03	
8		Duration parameter 0x04	Awake duaration 0x01	4Byte integer data	Unit min
			Light sleep duration 0x02	4Byte integer data	
			Deep sleep duration 0x03	4Byte integer data	
9		Sleep quality Parameter 0x05	Sleep quality scores 0x01	1Byte integer data	

Instruction: 1）Data read/write:command sent from host computer to radar

2）Report command:information sent from radar to host computer

Appendix 1：Parsing Code for Reference of CRC Check Code

```
const unsigned char cuc_CRCHi[256]=
{
   0x00, 0xC1, 0x81, 0x40, 0x01, 0xC0, 0x80, 0x41, 0x01, 0xC0, 0x80, 0x41,
   0x00, 0xC1, 0x81, 0x40, 0x01, 0xC0, 0x80, 0x41, 0x00, 0xC1, 0x81, 0x40,
   0x00, 0xC1, 0x81, 0x40, 0x01, 0xC0, 0x80, 0x41, 0x01, 0xC0, 0x80, 0x41,
   0x00, 0xC1, 0x81, 0x40, 0x00, 0xC1, 0x81, 0x40, 0x01, 0xC0, 0x80, 0x41,
   0x00, 0xC1, 0x81, 0x40, 0x01, 0xC0, 0x80, 0x41, 0x01, 0xC0, 0x80, 0x41,
   0x00, 0xC1, 0x81, 0x40, 0x01, 0xC0, 0x80, 0x41, 0x00, 0xC1, 0x81, 0x40,
   0x00, 0xC1, 0x81, 0x40, 0x01, 0xC0, 0x80, 0x41, 0x00, 0xC1, 0x81, 0x40,
   0x01, 0xC0, 0x80, 0x41, 0x01, 0xC0, 0x80, 0x41, 0x00, 0xC1, 0x81, 0x40,
   0x00, 0xC1, 0x81, 0x40, 0x01, 0xC0, 0x80, 0x41, 0x01, 0xC0, 0x80, 0x41,
   0x00, 0xC1, 0x81, 0x40, 0x01, 0xC0, 0x80, 0x41, 0x00, 0xC1, 0x81, 0x40,
   0x00, 0xC1, 0x81, 0x40, 0x01, 0xC0, 0x80, 0x41, 0x01, 0xC0, 0x80, 0x41,
   0x00, 0xC1, 0x81, 0x40, 0x00, 0xC1, 0x81, 0x40, 0x01, 0xC0, 0x80, 0x41,
   0x00, 0xC1, 0x81, 0x40, 0x01, 0xC0, 0x80, 0x41, 0x01, 0xC0, 0x80, 0x41,
   0x00, 0xC1, 0x81, 0x40, 0x00, 0xC1, 0x81, 0x40, 0x01, 0xC0, 0x80, 0x41,
   0x01, 0xC0, 0x80, 0x41, 0x00, 0xC1, 0x81, 0x40, 0x01, 0xC0, 0x80, 0x41,
   0x00, 0xC1, 0x81, 0x40, 0x00, 0xC1, 0x81, 0x40, 0x01, 0xC0, 0x80, 0x41,
   0x00, 0xC1, 0x81, 0x40, 0x01, 0xC0, 0x80, 0x41, 0x01, 0xC0, 0x80, 0x41,
   0x00, 0xC1, 0x81, 0x40, 0x01, 0xC0, 0x80, 0x41, 0x00, 0xC1, 0x81, 0x40,
   0x00, 0xC1, 0x81, 0x40, 0x01, 0xC0, 0x80, 0x41, 0x01, 0xC0, 0x80, 0x41,
   0x00, 0xC1, 0x81, 0x40, 0x00, 0xC1, 0x81, 0x40, 0x01, 0xC0, 0x80, 0x41,
   0x00, 0xC1, 0x81, 0x40, 0x01, 0xC0, 0x80, 0x41, 0x01, 0xC0, 0x80, 0x41,
   0x00, 0xC1, 0x81, 0x40
};
```

```
const unsigned char  cuc_CRCLo[256]=
{
   0x00, 0xC0, 0xC1, 0x01, 0xC3, 0x03, 0x02, 0xC2, 0xC6, 0x06, 0x07, 0xC7,
   0x05, 0xC5, 0xC4, 0x04, 0xCC, 0x0C, 0x0D, 0xCD, 0x0F, 0xCF, 0xCE, 0x0E,
   0x0A, 0xCA, 0xCB, 0x0B, 0xC9, 0x09, 0x08, 0xC8, 0xD8, 0x18, 0x19, 0xD9,
   0x1B, 0xDB, 0xDA, 0x1A, 0x1E, 0xDE, 0xDF, 0x1F, 0xDD, 0x1D, 0x1C, 0xDC,
   0x14, 0xD4, 0xD5, 0x15, 0xD7, 0x17, 0x16, 0xD6, 0xD2, 0x12, 0x13, 0xD3,
   0x11, 0xD1, 0xD0, 0x10, 0xF0, 0x30, 0x31, 0xF1, 0x33, 0xF3, 0xF2, 0x32,
   0x36, 0xF6, 0xF7, 0x37, 0xF5, 0x35, 0x34, 0xF4, 0x3C, 0xFC, 0xFD, 0x3D,
   0xFF, 0x3F, 0x3E, 0xFE, 0xFA, 0x3A, 0x3B, 0xFB, 0x39, 0xF9, 0xF8, 0x38,
   0x28, 0xE8, 0xE9, 0x29, 0xEB, 0x2B, 0x2A, 0xEA, 0xEE, 0x2E, 0x2F, 0xEF,
   0x2D, 0xED, 0xEC, 0x2C, 0xE4, 0x24, 0x25, 0xE5, 0x27, 0xE7, 0xE6, 0x26,
   0x22, 0xE2, 0xE3, 0x23, 0xE1, 0x21, 0x20, 0xE0, 0xA0, 0x60, 0x61, 0xA1,
   0x63, 0xA3, 0xA2, 0x62, 0x66, 0xA6, 0xA7, 0x67, 0xA5, 0x65, 0x64, 0xA4,
   0x6C, 0xAC, 0xAD, 0x6D, 0xAF, 0x6F, 0x6E, 0xAE, 0xAA, 0x6A, 0x6B, 0xAB,
   0x69, 0xA9, 0xA8, 0x68, 0x78, 0xB8, 0xB9, 0x79, 0xBB, 0x7B, 0x7A, 0xBA,
   0xBE, 0x7E, 0x7F, 0xBF, 0x7D, 0xBD, 0xBC, 0x7C, 0xB4, 0x74, 0x75, 0xB5,
   0x77, 0xB7, 0xB6, 0x76, 0x72, 0xB2, 0xB3, 0x73, 0xB1, 0x71, 0x70, 0xB0,
   0x50, 0x90, 0x91, 0x51, 0x93, 0x53, 0x52, 0x92, 0x96, 0x56, 0x57, 0x97,
   0x55, 0x95, 0x94, 0x54, 0x9C, 0x5C, 0x5D, 0x9D, 0x5F, 0x9F, 0x9E, 0x5E,
   0x5A, 0x9A, 0x9B, 0x5B, 0x99, 0x59, 0x58, 0x98, 0x88, 0x48, 0x49, 0x89,
   0x4B, 0x8B, 0x8A, 0x4A, 0x4E, 0x8E, 0x8F, 0x4F, 0x8D, 0x4D, 0x4C, 0x8C,
   0x44, 0x84, 0x85, 0x45, 0x87, 0x47, 0x46, 0x86, 0x82, 0x42, 0x43, 0x83,
  0x41, 0x81, 0x80,  0x40
};
```

```
 static unsigned short int  us_CalculateCrc16(unsigned char *lpuc_Frame, unsigned short int  lus_Len)
{
   unsigned char luc_CRCHi = 0xFF;
   unsigned char luc_CRCLo = 0xFF;
   int li_Index=0;

   while(lus_Len--)
   {
       li_Index = luc_CRCLo ^ *( lpuc_Frame++);
       luc_CRCLo = (t_BYTE)( luc_CRCHi ^ cuc_CRCHi[li_Index]);
       luc_CRCHi = cuc_CRCLo[li_Index];
   }
   return (unsigned short int )(luc_CRCLo << 8 | luc_CRCHi);
}
```

Appendix 2：Parsing Code for Reference of Body Motion Sign Parameters

```
typedef union
{
        unsigned char Byte[4];
        float Float;
}Float_Byte;

 void main()
{
         Float_Byte fb; fb.Byte[0]
        = 0x9A; fb.Byte[1] =
        0xFB; fb.Byte[2] = 0xE7;
        fb.Byte[3] = 0x3F;
        printf("%f\r\n",fb.Float);
}
```

IFLABEL