Manual of Wireless Bio-Radar Sensor for Falling Detection (FDS)

IR24FDA

Dalian iFlabel Technology Co., L T D

Specification

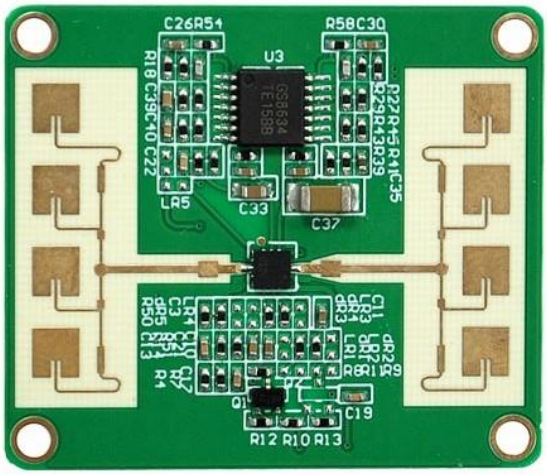

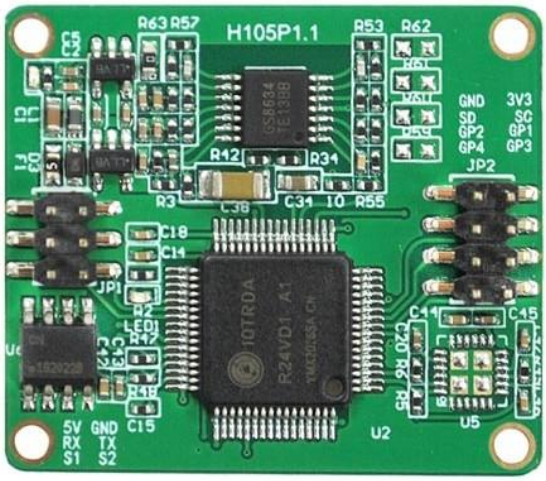

Model	**Standard**
Description	**Wireless Bio-Radar Sensor for Falling Detection**
Part Number	**IR24FDA**
Date	**2021/06/28**
Version	**1.3**

	Design Team		
	Approval	**Check**	**Edit**
			

R.1513, Zhongnan Building Block A, NO.18 Zhonghua W. Rd, Ganjingzi Dist, Dalian

Tel: +86-411-84619565
Email: info@iflabel.com
Site: www.iflabel.com

Contents

Overview

This document mainly describes the use of the radar and the problems needing attention in each stage, so as to reduce the design cost and increase the stability of the product as much as possible and improve the completion efficiency of the project.

From the hardware circuit reference design, the layout requirements of radar antenna and shell, how to distinguish interference and multifunctional standard UART protocol output.

The radar is a self-contained space sensing sensor, which is a module composed of RF antenna, radar chip and high-speed main frequency MCU. Relying on the stable, flexible and superior algorithm architecture core, the radar can solve the user's various scene detection needs. It can be equipped with upper computer or host computer to flexibly output detection status and data, meet several groups of GPIO, and can be customized and developed by users.

1. Operating Principle

The radar transmits 24G band millimeter wave signal, the measured target reflects electromagnetic wave signal, demodulates the transmitted signal, and then obtains echo demodulated signal data through amplification, filtering, ADC and other processing. The amplitude, frequency and phase of echo signal are solved in MCU unit, and finally the measurement of target parameters (breathing, motion, micro motion, etc.) and scene evaluation are realized.

2. Precautions for Hardware Design

The rated power supply voltage of the radar shall meet 4.9 - 6V. Under normal working conditions, the rated current requires an input of more than 200mA. Power supply design, power ripple shall be ≤ 100mV.

2.1.Circuit for Reference of Power Supply Design

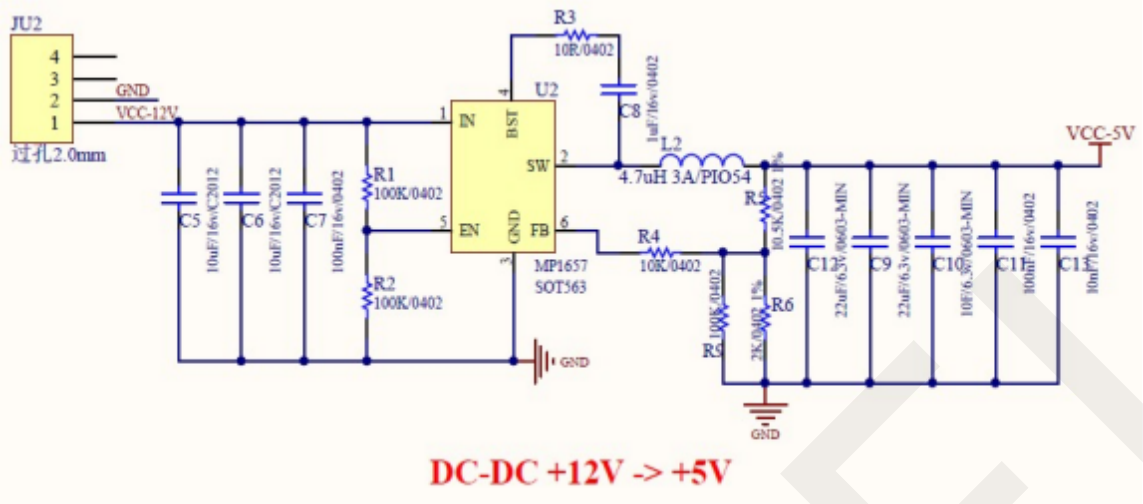

Figure 1.

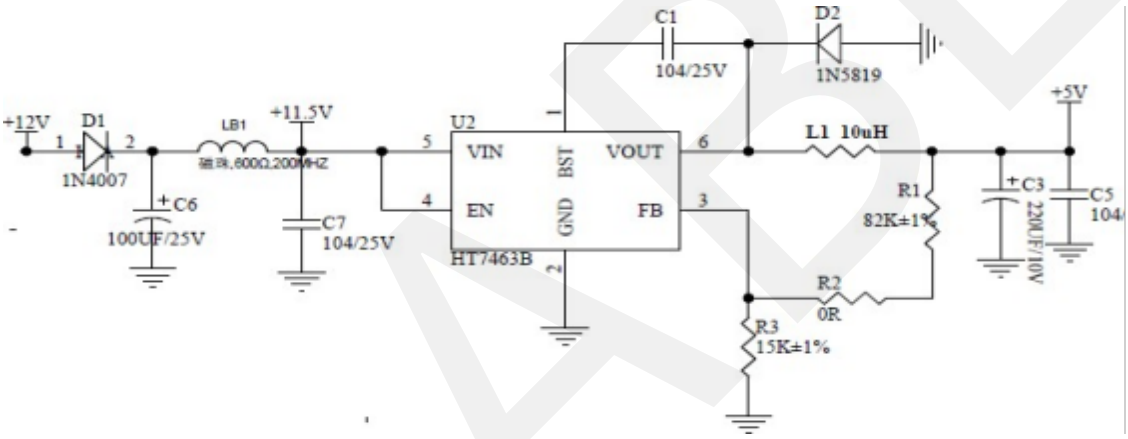

Figure 2.

2.2. Wiring Diagram

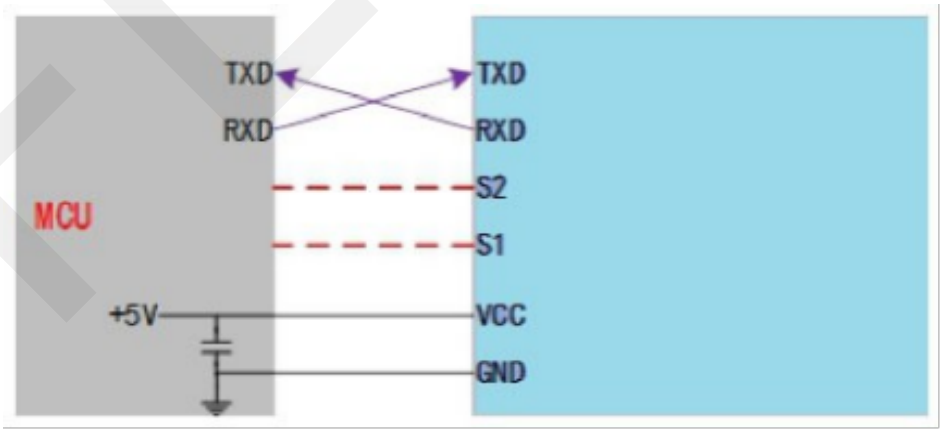

Figure 3. Wiring Diagram of Radar Module and Peripheral Device

3. Layout Requirements of Antenna and Case

PCBA：Height of Radar Mount Above Other Components≥ 1mm

Case Structure：Radar Antenna Plane to Case: 2 - 5mm

External Detection Surface：Non-metallic plane, no curve to avoid affection on performance of detection coverage

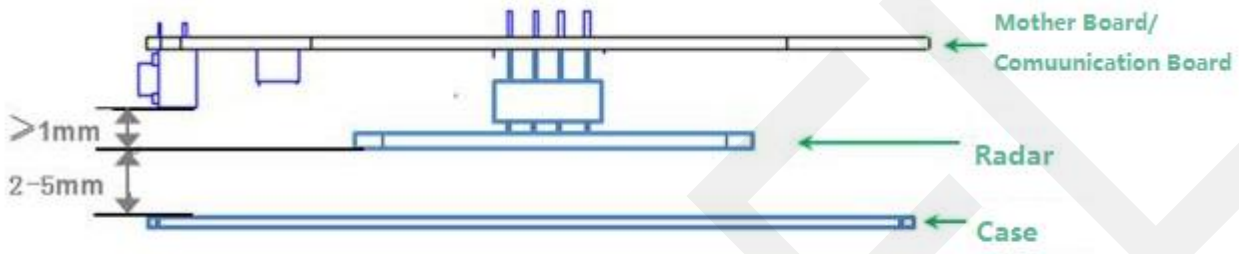

Figure 4

4. Electrostatic Protection

The radar product has an electrostatic sensitive circuit inside, which is vulnerable to electrostatic hazards. Therefore, it is necessary to do a good job in electrostatic protection in the process of transportation, storage, work and taking. Do not touch and grasp the antenna surface and connector pins of the radar module, but only the corners.

When operating the radar sensor, please wear anti-static gloves.

5. Factors Interfering Radar Function

5.1 Abnormal Output of Nobody State

A. Movements from doorway, the other side of wooden wall detected due to too large radar scanning coverage

Adjustment：Tune down sensitivity and set up scenario for radar

B. Radar faces down air-conditioning, fan in operating

Adjustment：Readjust the position of radar

C. Swinging objects by airflow from air-conditioning

Adjustment：Cotton, non-metallic objects will not cause false-alarm and metallic objects need to be fixed

D. False alarm by Vibration of Radar not fixed

Adjustment：Avoid shaking or vibration

E. Pets, flying birds or other moving objects
Adjustment：Because of the high sensitivity of slight motion detection, this cannot be excluded

F. False judgement from interference of power supply
Adjustment：Stabilize the current and reduce ripple

5.2 Abnormal Output of Somebody State

Radar judges human presence via sending and receiving electromagnet wave, closer to radar, higher the accuracy

A. Human body beyond radar scanning coverage
Adjustment：Readjust the installation angle. Detection range varies slightly in different environments due to different reflection coverage

B. False output due to shading by metallic objects
Too thick office desks, chairs made from metal will block electromagnet wave and cause a false alarm

C. Difference in scanning angle
Adjustment：Human body not scanned by radar, causing a false alarm

D. Low sensitivity of radar
Adjustment：Use parameter condition of radar to improve

6. Functions

6.1. Description of Functions

Function Points	Time of State Change/Explanation
DP1：somebody/nobody	nobody to somebody, report within 0.5s somebody to nobody, output "No" in 1to 2mins
DP2：stationary/active	shift between stationaryand active, report within 0.5s
DP3：personnel approaching/leaving/no directional movement	output every 2s
DP4：parameter of body motion amplitude from 0 – 100	output every 5s refer to（section 6.2)

DP5：sensitivity gear from 0 – 9	10 gears for default scenario
DP7：scenario（bed,bathroom,hotel,bedroom,office, default）	different scenarios according to size of coverage
DP8：confirm reminder of false alarm of nobody	
DP9：switch for falling detection	default:shut down, only effective when turned on
DP10：state of falling	Two-step mechanism:suspected falling, alarm of suspected falling, falling object detected-after time duration of T, report
DP11：T:time of reporting falling alarm	Default 3 min, gears between 1-5 min
DP12：alarm of dwelling	Report at four level time

6.2. Output Description of Body Motion Amplitude Parameters

Parameter of Body Motion Amplitude		
0%	nobody	nobody in environment
1%	static	no body movement only respiration
2%-30%	slight motion	slight motion from head or limbs
31%-60%	walk/quick body movement	relatively slow body movement
61%-100%	run/big movement in close distance	quick body movement

7. Instruction of Protocol

This protocol is applied to the communication between 24G millimeter wave detection radar and host computer.

This protocol briefly introduces the radar work flow, briefly introduces the composition architecture of the interface protocol, and gives the control commands and data required for relevant radar work. The definition of serial port communication is as follows:

Interface level：TTL

Baud rate：9600bps

Stop bit：1

Data bit：8

Parity check：No

8. Communication Commands and Parameter Definition

8.1. Definition and Instruction of Frame Structure

A. Definition of Frame Structure

Initial Code	Data Length		Function Code	Address Code 1	Address Code 2	Data	Check Code	
0X55	Lenth_L	Lenth_H	Command	Address_1	Address_2	Data	Crc16_L	Crc16_H
1 Byte	1 Byte	1 Byte	1 Byte	1 Byte	1 Byte	n Byte	1 Byte	1 Byte

B. Instruction of Frame Structure

a Initial code：1Byte, default 0X55

b Data length：2 Byte, low byte first, high byte after
length=data length+function code+address code 1+address code 2+data+check code

c Function：1Byte

Data read：0X01

Data write：0X02

Passive report command：0X03

Active report command：0X04

d Address：address code 1 function classify, address code 2 specific function

e Please refer to instruction of address distribution and data information

f Data：n Byte

g Check code：2 Byte, low byte first, high byte after
Use CRC16 for check, please refer to Appendix 1

8.2. Address Distribution and Data Information Instruction

Interface Contents of 24G Bio-perception Radar					
	Function code	Address code 1	Address code 2	Data	Remark
1	Read 0x01	Mark looking up 0x01	Device ID 0X01		
2			Software version 0x02		
3			Software version 0x03		
4			Protocol version 0x04		
5		Looking-up radar information 0x03	Environment state 0X05		
6			Vital sign parameter 0x06		
7		System parameter looking-up 0x04	Threshold gear 0x0C		
8			Scenario setting 0x10		

9		Look up for other information 0X05	Switch of falling detection 0X0B		Look up for current state of switch of falling detection
10			Look up for time of falling alarm 0X0C		Look up for current time of falling detection alarm
			Look up for falling detection sensitivity 0X0E		Look up for current sensitivity of falling detection

Interface Contents of 24G Bio-perception Radar					
1	Write 0x02	System parameter 0x04	Threshold gear 0x0C	Enumeration range 0~9	Respectively to gear level 0 1 2 3 4 5 6 7 8 9 (default is 6) higher gear level, higher sensitivity
2			Scenario setting 0x10	Default mode 0x00	
3				Area detection (Top-mounted) 0x01	
4				Bathroom (Top-mounted) 0x02	
5				Bedroom (Top-mounted) 0x03	
6				Living room (Top-mounted) 0x04	
7				Office (Top-mounted) 0x05	
8				Hotel (Top-mounted) 0x06	
9		Other function 0X05	Restart 0X04		
10			Switch of falling detection 0x0B	OFF 0x00	
				ON 0x01	
			Alarm time of falling detection 0X0C	1min 0X00	
				2min 0X01	
				3min 0X02	
				4min 0X03	
				5min 0X04	
				6min 0X05	
				7min 0X06	
				8min 0X07	

				9min 0X08	
				10min 0X09	
			Sensitivity setting of falling detection0X0E	0X00 0 level	Default level is 6 Smaller the gear, higher the sensitivity, vice versa
				0X01 1 level	
				0X02 2 level	
				0X03 3 level	
				0X04 4 level	

				0X05 5 level	
				0X06 6 level	
				0X07 7 level	
				0X08 8 level	
				0X09 9 level	
11			OTA upgrade start 0X08	4byte integer data (firmware size) + nbyte (software version number)	
12			Upgrade Transmission 0X09	Packet deviation (4byte) + Data packet (1024byte)	
13			Upgrade complete information 0X0A	Fixed character 0X0F	

Interface Contents of 24G Bio-perception Radar					
1	Passive report command 0x03	Report Radar information 0x01	Device ID 0x01	12 Byte data	
2			Software version 0x02	10 Byte data	
3			Hardware version 0x03	8 Byte data	
4			Protocol version 0x04	8 Byte data	

Interface Contents of 24G Bio-perception Radar					
1	Pssive report command 0x03	Report Radar information 0X03	Environment sate 0x05	Nobody 00 FF FF	
2				s t a t i o n a r y personnel 01 00 FF	
3				Active personnel 01 01 01	
4			Vital parameters 0x06	4 Byte Float data	

Interface Contents of 24G Bio-perception Radar					
1	Passive report command 0x03	Report system information 0X04	Threshold gear 0X0C	Current gear (0X00~0X09)	
2			Scenario setting 0x10	Default 0x00	
				Area detection (Top-mounted) 0x01	
				Bathroom (Top-mounted) 0x02	
				Bedroom (Top-mounted) 0x03	
				Living room (Top-mounted) 0x04	
				Office (Top-mounted) 0x05	
				Hotel (Top-mounted) 0x06	

Interface Contents of 24G Bio-perception Radar					
1	Passive report 0x03	Report other information 0X05	Feedback of OTA upgrade start 0X08	Fail 0X00	
2				Succeed 0X01	
3			Feedback of OTA transmission 0X09	Fixed character 0X0F	
			Switch of falling dection0X0B	OFF 0X00	
				ON 0X01	
4			Time of falling detection alarm 0X0C	1min 0X00	
				2min 0X01	
				3min 0X02	
				4min 0X03	
				5min 0X04	
				6min 0X05	
				7min 0X06	
				8min 0X07	
				9min 0X08	
				10min 0X09	
				0X00 0 level	
				0X01 1 level	
				0X02 2 level	
				0X03 3 level	

			Return current sensitivity gear for falling detection 0X0E	0X04 4 level	
				0X05 5 level	
				0X06 6 level	
				0X07 7 level	
				0X08 8 level	
				0X09 9 level	

Interface Contents of 24G Bio-perception Radar						
1	Active report0X04	Module mark of report 0X01	Software version 0X02			Report at every OTA upgrade complete/re-power on
2		Report radar information 0x03	Environment state 0x05	Nobody 00 FF FF		
3				Somebody Static 01 00 FF		
4				Active personnel 01 01 01		
5			Parameter of body motion 0X06	4Byte Float data		
6			Approaching/Leaving 0x07	Fixed character 0x01 0x01	No 0x01	
7					Approaching 0x02	
8					Leaving 0x03	
9		Report other information 0X05	Heartbeat 0X01	No 00 FF FF		
10				Stationary personnel 01 00 FF		
11				Active personnel 01 01 01		
12			Reset of abnormal 0X02	0X0F		

Interface Contents of 24G Bio-perception Radar					
1	Data report 0x06	Alarm 0x01	Alarm of falling 0x01	Suspected Falling 0X00	
				Confirmed Falling 0X01	
				No Falling 0X02	
2			Alarm of dwelling 0X02	No 0x00	Alarm time node : 5min/10min/30min/60min
				1st time 0X01	
				2nd time 0X02	
				3rd time 0X03	
				4th time 0X04	

Instruction：1）Data read/write:command sent from host computer to radar

2）Report command:information sent from radar to host computer

3）Gear of sensitivity of falling from 0~9, default 6, smaller the gear, higher the sensitivity

4）Gear of sensitivity of human body人 from 0~9, default 6, bigger the gear, higher the sensitivity

Appendix 1：Parsing Code for Reference of CRC Check Code

```
const unsigned char cuc_CRCHi[256]=
{
    0x00, 0xC1, 0x81, 0x40, 0x01, 0xC0, 0x80, 0x41  0x01, 0xC0, 0x80  0x41,
                                                  ,                  ,
    0x00, 0xC1, 0x81, 0x40, 0x01, 0xC0, 0x80, 0x41  0x00, 0xC1, 0x81  0x40,
                                                  ,                  ,
    0x00, 0xC1, 0x81, 0x40, 0x01, 0xC0, 0x80, 0x41  0x01, 0xC0, 0x80  0x41,
                                                  ,                  ,
    0x00, 0xC1, 0x81, 0x40, 0x00, 0xC1, 0x81, 0x40  0x01, 0xC0, 0x80  0x41,
                                                  ,                  ,
    0x00, 0xC1, 0x81, 0x40, 0x01, 0xC0, 0x80, 0x41  0x01, 0xC0, 0x80  0x41,
                                                  ,                  ,
    0x00, 0xC1, 0x81, 0x40, 0x01, 0xC0, 0x80, 0x41  0x00, 0xC1, 0x81  0x40,
                                                  ,                  ,
    0x00, 0xC1, 0x81, 0x40, 0x01, 0xC0, 0x80, 0x41  0x00, 0xC1, 0x81  0x40,
                                                  ,                  ,
    0x01, 0xC0, 0x80, 0x41, 0x01, 0xC0, 0x80, 0x41  0x00, 0xC1, 0x81  0x40,
                                                  ,                  ,
    0x00, 0xC1, 0x81, 0x40, 0x01, 0xC0, 0x80, 0x41  0x01, 0xC0, 0x80  0x41,
                                                  ,                  ,
    0x00, 0xC1, 0x81, 0x40, 0x01, 0xC0, 0x80, 0x41  0x00, 0xC1, 0x81  0x40,
                                                  ,                  ,
    0x00, 0xC1, 0x81, 0x40, 0x01, 0xC0, 0x80, 0x41  0x01, 0xC0, 0x80  0x41,
                                                  ,                  ,
    0x00, 0xC1, 0x81, 0x40, 0x00, 0xC1, 0x81, 0x40  0x01, 0xC0, 0x80  0x41,
                                                  ,                  ,
    0x00, 0xC1, 0x81, 0x40, 0x01, 0xC0, 0x80, 0x41  0x01, 0xC0, 0x80  0x41,
                                                  ,                  ,
    0x00, 0xC1, 0x81, 0x40, 0x00, 0xC1, 0x81, 0x40  0x01, 0xC0, 0x80  0x41,
                                                  ,                  ,
    0x01, 0xC0, 0x80, 0x41, 0x00, 0xC1, 0x81, 0x40  0x01, 0xC0, 0x80  0x41,
                                                  ,                  ,
    0x00, 0xC1, 0x81, 0x40, 0x00, 0xC1, 0x81, 0x40  0x01, 0xC0, 0x80  0x41,
                                                  ,                  ,
    0x00, 0xC1, 0x81, 0x40, 0x01, 0xC0, 0x80, 0x41  0x01, 0xC0, 0x80  0x41,
                                                  ,                  ,
    0x00, 0xC1, 0x81, 0x40, 0x01, 0xC0, 0x80, 0x41  0x00, 0xC1, 0x81  0x40,
                                                  ,                  ,
    0x00, 0xC1, 0x81, 0x40, 0x01, 0xC0, 0x80, 0x41  0x01, 0xC0, 0x80  0x41,
                                                  ,                  ,
    0x00, 0xC1, 0x81, 0x40, 0x00, 0xC1, 0x81, 0x40  0x01, 0xC0, 0x80  0x41,
                                                  ,                  ,
    0x00, 0xC1, 0x81, 0x40, 0x01, 0xC0, 0x80, 0x41  0x01, 0xC0, 0x80  0x41,
                                                  ,                  ,
    0x00, 0xC1, 0x81, 0x40
};
```

```
const unsigned char cuc_CRCLo[256]=
{
    0x00, 0xC0, 0xC1, 0x01, 0xC3, 0x03, 0x02, 0xC2, 0xC6, 0x06, 0x07, 0xC7,
    0x05, 0xC5, 0xC4, 0x04, 0xCC, 0x0C, 0x0D, 0xCD, 0x0F, 0xCF, 0xCE, 0x0E,
    0x0A, 0xCA, 0xCB, 0x0B, 0xC9, 0x09, 0x08, 0xC8, 0xD8, 0x18, 0x19, 0xD9,
    0x1B, 0xDB, 0xDA, 0x1A, 0x1E, 0xDE, 0xDF, 0x1F, 0xDD, 0x1D, 0x1C, 0xDC,
    0x14, 0xD4, 0xD5, 0x15, 0xD7, 0x17, 0x16, 0xD6, 0xD2, 0x12, 0x13, 0xD3,
    0x11, 0xD1, 0xD0, 0x10, 0xF0, 0x30, 0x31, 0xF1, 0x33, 0xF3, 0xF2, 0x32,
    0x36, 0xF6, 0xF7, 0x37, 0xF5, 0x35, 0x34, 0xF4, 0x3C, 0xFC, 0xFD, 0x3D,
    0xFF, 0x3F, 0x3E, 0xFE, 0xFA, 0x3A, 0x3B, 0xFB, 0x39, 0xF9, 0xF8, 0x38,
    0x28, 0xE8, 0xE9, 0x29, 0xEB, 0x2B, 0x2A, 0xEA, 0xEE, 0x2E, 0x2F, 0xEF,
    0x2D, 0xED, 0xEC, 0x2C, 0xE4, 0x24, 0x25, 0xE5, 0x27, 0xE7, 0xE6, 0x26,
    0x22, 0xE2, 0xE3, 0x23, 0xE1, 0x21, 0x20, 0xE0, 0xA0, 0x60, 0x61, 0xA1,
    0x63, 0xA3, 0xA2, 0x62, 0x66, 0xA6, 0xA7, 0x67, 0xA5, 0x65, 0x64, 0xA4,
    0x6C, 0xAC, 0xAD, 0x6D, 0xAF, 0x6F, 0x6E, 0xAE, 0xAA, 0x6A, 0x6B, 0xAB,
    0x69, 0xA9, 0xA8, 0x68, 0x78, 0xB8, 0xB9, 0x79, 0xBB, 0x7B, 0x7A, 0xBA,
    0xBE, 0x7E, 0x7F, 0xBF, 0x7D, 0xBD, 0xBC, 0x7C, 0xB4, 0x74, 0x75, 0xB5,
    0x77, 0xB7, 0xB6, 0x76, 0x72, 0xB2, 0xB3, 0x73, 0xB1, 0x71, 0x70, 0xB0,
    0x50, 0x90, 0x91, 0x51, 0x93, 0x53, 0x52, 0x92, 0x96, 0x56, 0x57, 0x97,
    0x55, 0x95, 0x94, 0x54, 0x9C, 0x5C, 0x5D, 0x9D, 0x5F, 0x9F, 0x9E, 0x5E,
    0x5A, 0x9A, 0x9B, 0x5B, 0x99, 0x59, 0x58, 0x98, 0x88, 0x48, 0x49, 0x89,
    0x4B, 0x8B, 0x8A, 0x4A, 0x4E, 0x8E, 0x8F, 0x4F, 0x8D, 0x4D, 0x4C, 0x8C,
    0x44, 0x84, 0x85, 0x45, 0x87, 0x47, 0x46, 0x86, 0x82, 0x42, 0x43, 0x83,
    0x41, 0x81, 0x80, 0x40
};
```

```
static unsigned shortint    us_CalculateCrc16(unsigned char *lpuc_Frame,unsigned short int   lus_Len)
{
    unsigned char luc_CRCHi = 0xFF;
    unsigned char luc_CRCLo = 0xFF;
    int li_Index=0;

    while(lus_Len--)
    {
        li_Index = luc_CRCLo ^ *(lpuc_Frame++);
        luc_CRCLo = (t_BYTE)( luc_CRCHi ^cuc_CRCHi[li_Index]);
        luc_CRCHi = cuc_CRCLo[li_Index];
    }
    return (unsigned short int )(luc_CRCLo << 8 |luc_CRCHi);
}
```

Appendix 2：Parsing Code for Reference of Body Motion Sign Parameters

```
typedef union
{
    unsigned char
    Byte[4]; float Float;
}Float_Byte;

void main()
{
    Float_Byte fb;
    fb.Byte[0] = 0x9A;
    fb.Byte[1] = 0xFB;
    fb.Byte[2] = 0xE7;
    fb.Byte[3] = 0x3F;
    printf("%f\r\n",fb.Float);
}
```