2.13 inch
E-paper Display Series

GooDisplay®

GDEM0213B74

Dalian Good Display Co., Ltd.

Product Specifications

Customer	**Standard**
Description	**2.13” E-PAPER DISPLAY**
Model Name	**GDEM0213B74**
Date	**2021/01/18**
Revision	**1.1**

	Design Engineering		
	Approval	**Check**	**Design**

Zhongnan Building, No.18, Zhonghua West ST,Ganjingzi DST,Dalian,CHINA
Tel: +86-411-84619565
Email: info@good-display.com
Website: www.good-display.com

Revision History

Version	Content	Date	Producer
1.0	New release	2020/07/21	
1.1	Updating	2021/01/18	

CONTENTS

1. Over View

GDEM0213B74 is an Active Matrix Electrophoretic Display (AM EPD), with interface and a reference system design. The display is capable to display images at 1-bit white, black full display capabilities. The2.13inch active area contains 250×122 pixels. The module is a TFT-array driving electrophoresis display, with integrated circuits including gate driver, source driver, MCU interface, timing controller, oscillator, DC-DC, SRAM, LUT, VCOM. Module can be used in portable electronic devices, such as Electronic Shelf Label (ESL) System.

2. Features

◆250×122 pixels display
◆High contrast High reflectance
◆Ultra wide viewing angle Ultra low power consumption
◆Pure reflective mode
◆Bi-stable display
◆Commercial temperature range
◆Landscape portrait modes
◆Hard-coat antiglare display surface
◆Ultra Low current deep sleep mode
◆On chip display RAM
◆Waveform can stored in On-chip OTP or written by MCU
◆Serial peripheral interface available
◆On-chip oscillator
◆On-chip booster and regulator control for generating VCOM, Gate and Source driving voltage
◆I^2C signal master interface to read external temperature sensor
◆Built-in temperature sensor
◆Support partial update mode

3. Mechanical Specification

Parameter	Specifications	Unit	Remark
Screen Size	2.13	Inch	
Display Resolution	122(H)×250(V)	Pixel	DPI:130
Active Area	23.70×48.55	mm	
Pixel Pitch	0.1942×0.1942	mm	
Pixel Configuration	Square		
Outline Dimension	29.2(H)×59.2 (V) ×1.0(D)	mm	
Weight	3.2±0.5	g	

4.Mechanical Drawing of EPD Module

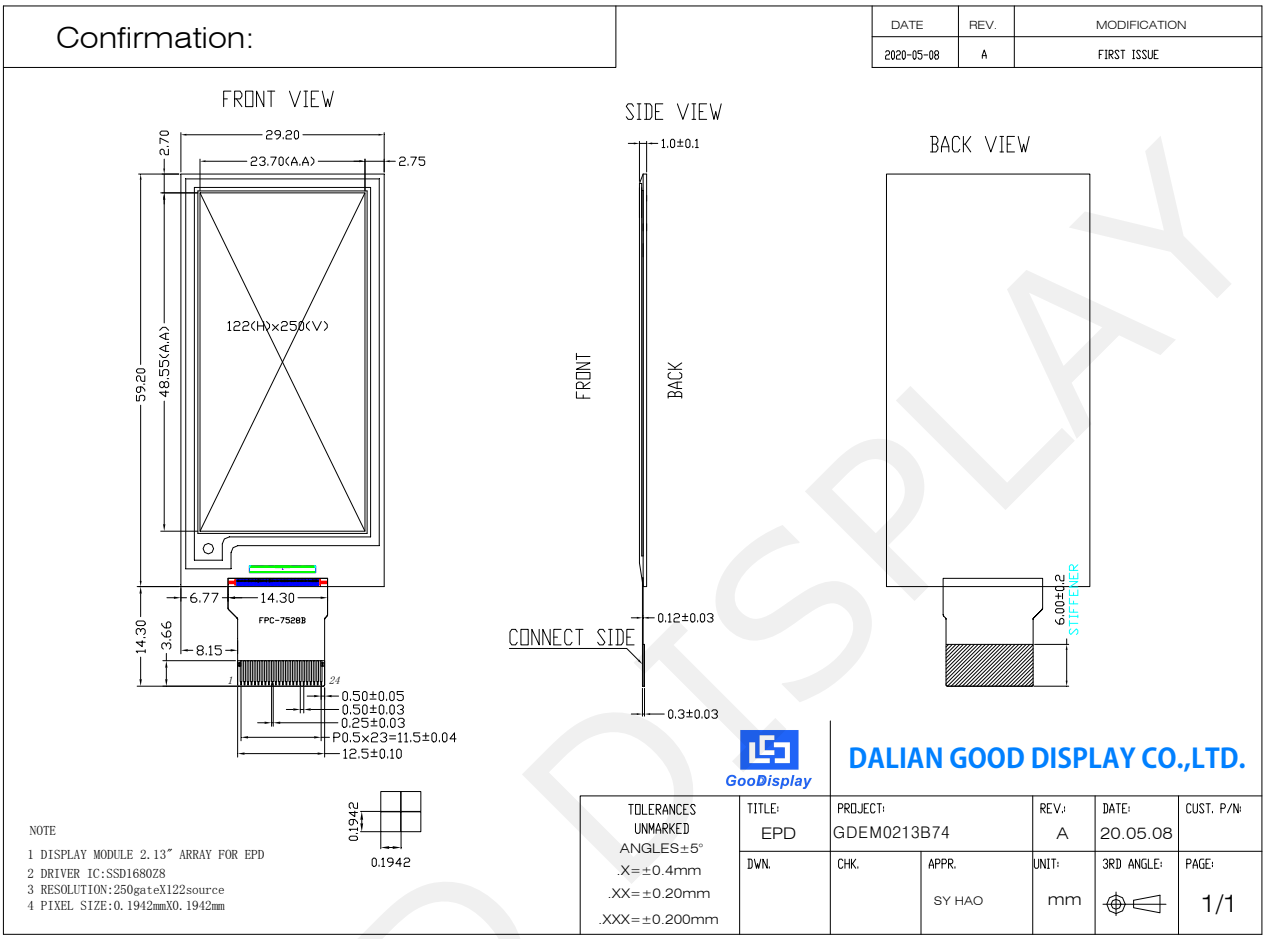

5. Input/output Pin Assignment

No.	Name	I/O	Description	Remark
1	NC		Do not connect with other NC pins	Keep Open
2	GDR	O	N-Channel MOSFET Gate Drive Control	
3	RESE	I	Current Sense Input for the Control Loop	
4	NC	NC	Do not connect with other NC pins	Keep Open
5	VSH2	C	Positive Source driving voltage(Red)	
6	TSCL	O	I2C Interface to digital temperature sensor Clock pin	
7	TSDA	I/O	I2C Interface to digital temperature sensor Data pin	
8	BS1	I	Bus Interface selection pin	Note 5-5
9	BUSY	O	Busy state output pin	Note 5-4
10	RES#	I	Reset signal input. Active Low.	Note 5-3
11	D/C#	I	Data /Command control pin	Note 5-2
12	CS#	I	Chip select input pin	Note 5-1
13	SCL	I	Serial Clock pin (SPI)	
14	SDA	I/O	Serial Data pin (SPI)	
15	VDDIO	P	Power Supply for interface logic pins It should be connected with VCI	
16	VCI	P	Power Supply for the chip	
17	VSS	P	Ground	
18	VDD	C	Core logic power pin VDD can be regulated internally from VCI. A capacitor should be connected between VDD and VSS	
19	VPP	P	FOR TEST	Keep Open
20	VSH1	C	Positive Source driving voltage	
21	VGH	C	Power Supply pin for Positive Gate driving voltage and VSH1	
22	VSL	C	Negative Source driving voltage	
23	VGL	C	Power Supply pin for Negative Gate driving voltage VCOM and VSL	
24	VCOM	C	VCOM driving voltage	

I = Input Pin, O =Output Pin,I /O = Bi-directional Pin (Input/output), P = Power Pin, C = Capacitor Pin

Note 5-1: This pin (CS#) is the chip select input connecting to the MCU. The chip is enabled for MCU communication only when CS# is pulled LOW.

Note 5-2: This pin is (D/C#) Data/Command control pin connecting to the MCU in 4-wire SPI mode. When the pin is pulled HIGH, the data at SDA will be interpreted as data. When the pin is pulled LOW, the data at SDA will be interpreted as command.

Note 5-3: This pin (RES#) is reset signal input. The Reset is active low.

Note 5-4: This pin is Busy state output pin. When Busy is High, the operation of chip should not be interrupted, command should not be sent. The chip would put Busy pin High when -Outputting display waveform -Communicating with digital temperature sensor

Note 5-5: Bus interface selection pin

BS1 State	MCU Interface
L	4-lines serial peripheral interface(SPI) - 8 bits SPI
H	3- lines serial peripheral interface(SPI) - 9 bits SPI

6. Electrical Characteristics

6.1 Absolute Maximum Rating

Parameter	Symbol	Rating	Unit
Logic supply voltage	VCI	-0.5 to +4.0	V
Logic Input voltage	VIN	-0.5 to VCI +0.5	V
Logic Output voltage	VOUT	-0.5 to VCI +0.5	V
Operating Temp range	TOPR	0 to +50	ºC.
Storage Temp range	TSTG	-25 to+70	ºC.
Optimal Storage Temp	TSTGo	23±3	ºC.
Optimal Storage Humidity	HSTGo	55±10	%RH

Note: Maximum ratings are those values beyond which damages to the device may occur. Functional operation should be restricted to the limits in the Panel DC Characteristics tables.

6.2 Panel DC Characteristics

The following specifications apply for: VSS=0V, VCI=3.0V, TOPR =25ºC.

Parameter	Symbol	Condition	Applicable pin	Min.	Typ.	Max.	Unit
Single ground	V_{SS}	-		-	0	-	V
Logic supply voltage	V_{CI}	-	VCI	2.2	3.0	3.7	V
Core logic voltage	V_{DD}		VDD	1.7	1.8	1.9	V
High level input voltage	V_{IH}	-	-	0.8 V_{CI}	-	-	V
Low level input voltage	V_{IL}	-	-	-	-	0.2 V_{CI}	V
High level output voltage	V_{OH}	IOH = -100uA	-	0.9 V_{CI}	-	-	V
Low level output voltage	V_{OL}	IOL = 100uA	-	-	-	0.1 V_{CI}	V
Typical power	P_{TYP}	V_{CI} =3.0V	-	-	9	-	mW
Deep sleep mode	P_{STPY}	V_{CI} =3.0V	-	-	0.003	-	mW
Typical operating current	Iopr_VCI	V_{CI} =3.0V	-	-	3	- -	mA
Image update time	-	25 ºC	-	-	3	-	sec
Sleep mode current	Islp_V_{CI}	DC/DC off No clock No input load Ram data retain	-	-	20		uA
Deep sleep mode current	Idslp_V_{CI}	DC/DC off No clock No input load Ram data not retain	-	-	1	5	uA

Notes:

1. The typical power is measured with following transition from horizontal 2 scale pattern to vertical 2 scale pattern.

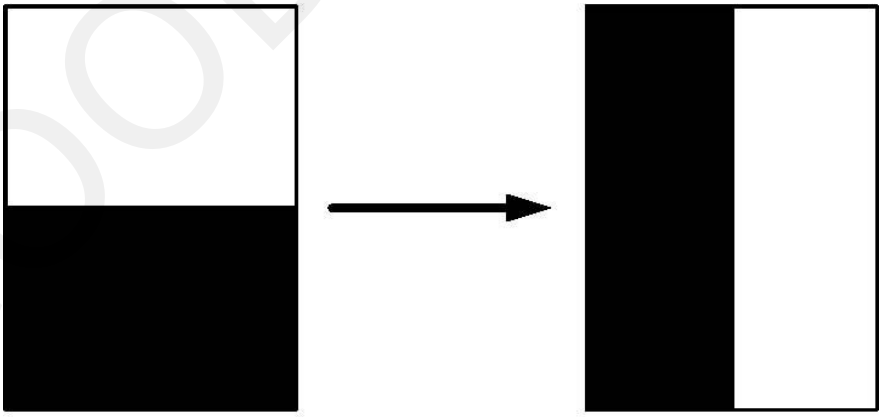

2. The deep sleep power is the consumed power when the panel controller is in deep sleep mode.
3. The listed electrical/optical characteristics are only guaranteed under the controller & waveform provided by Good Display.

6.3 Panel DC Characteristics(Driver IC Internal Regulators)

The following specifications apply for: VSS=0V, VCI=3.0V, TOPR =25ºC.

Parameter	Symbol	Condition	Applicable pin	Min.	Typ.	Max.	Unit
VCOM output voltage	VCOM	-	VCOM	-	TBD	-	V
Positive Source output voltage	V_{SH}	-	S_0~S_{121}	+14.5	+15	+15.5	V
Negative Source output voltage	V_{SL}	-	S_0~S_{121}	-15.5	-15	-14.5	V
Positive gate output voltage	Vgh	-	G_0~G_{249}	+21	+22	+23	V
Negative gate output voltage	Vgl	-	G_0~G_{249}	-21	-20	-19	V

6.4 Panel AC Characteristics

6.4.1 MCU Interface Selection

The pin assignment at different interface mode is summarized in Table 6-4-1. Different MCU mode can be set by hardware selection on BS1 pins. The display panel only supports 4-wire SPI or 3-wire SPI interface mode.

Pin Name	Data/Command Interface		Control Signal		
Bus interface	SDA	SCL	CS#	D/C#	RES#
BS1=L 4-wire SPI	SDA	SCL	CS#	D/C#	RES#
BS1=H 3-wire SPI	SDA	SCL	CS#	L	RES#

6.4.2 MCU Serial Interface (4-wire SPI)

The serial interface consists of serial clock SCL, serial data SDA, D/C#, CS#. This interface supports Write mode and Read mode.

Function	CS#	D/C#	SCL
Write command	L	L	↑
Write data	L	H	↑

Note: ↑ stands for rising edge of signal

In the write mode SDA is shifted into an 8-bit shift register on every rising edge of SCL in the order of D7, D6, ... D0. The level of D/C# should be kept over the whole byte . The data byte in the shift register is written to the Graphic Display Data RAM /Data Byte register or command Byte register according to D/C# pin.

Figure 6-1: Write procedure in 4-wire SPI mode

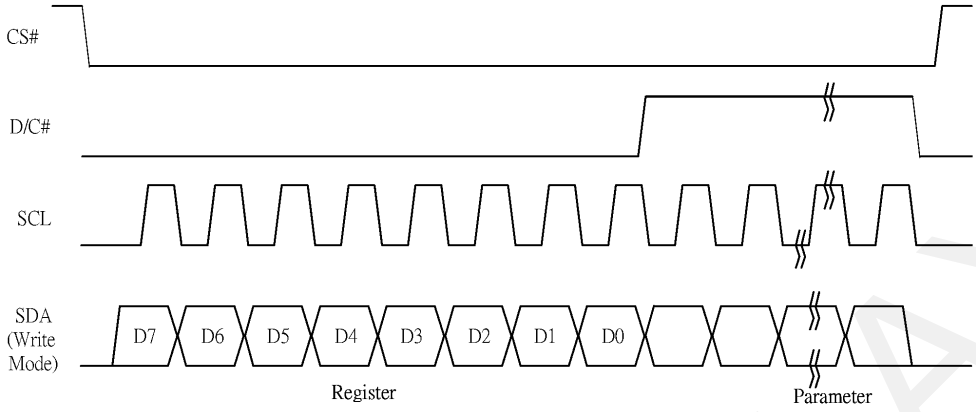

In the Read mode:

1. After driving CS# to low, MCU need to define the register to be read.

2. SDA is shifted into an 8-bit shift register on every rising edge of SCL in the order of D7, D6, ... D0 with D/C# keep low.

3. After SCL change to low for the last bit of register, D/C# need to drive to high.

4. SDA is shifted out an 8-bit data on every falling edge of SCL in the order of D7, D6, … D0.

5. Depending on register type, more than 1 byte can be read out. After all byte are read, CS# need to drive to high to stop the read operation.

Figure 6-2: Read procedure in 4-wire SPI mode

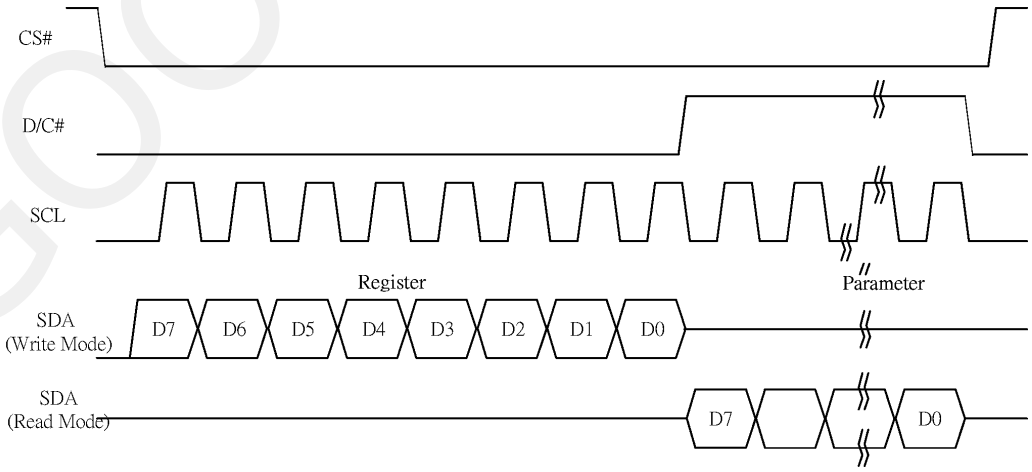

6.4.3 MCU Serial Interface (3-wire SPI)

The 3-wire serial interface consists of serial clock SCL, serial data SDA and CS#. This interface also supports Write mode and Read mode.

The operation is similar to 4-wire serial interface while D/C# pin is not used. There are altogether 9-bits will be shifted into the shift register on every ninth clock in sequence: D/C# bit, D7 to D0 bit. The D/C# bit (first bit of the sequential data) will determine the following data byte in the shift register is written to the Display Data RAM (D/C# bit = 1) or the command register (D/C# bit = 0).

Function	CS#	D/C#	SCL
Write command	L	Tie	↑
Write data	L	Tie	↑

Note: ↑ stands for rising edge of signal

Figure 6-3: Write procedure in 3-wire SPI mode

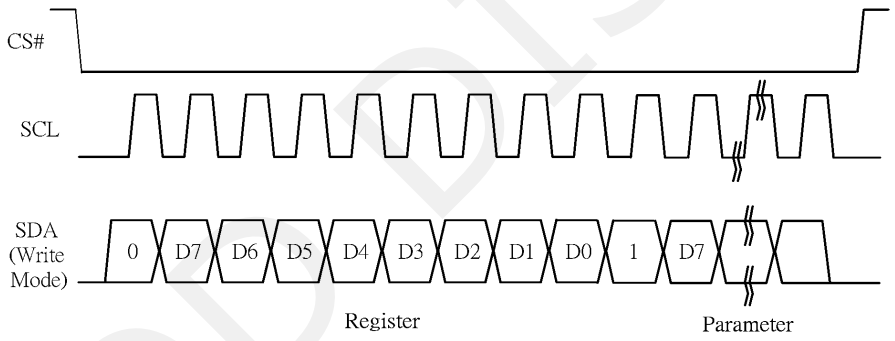

In the Read mode:

1. After driving CS# to low, MCU need to define the register to be read.
2. D/C=0 is shifted thru SDA with one rising edge of SCL
3. SDA is shifted into an 8-bit shift register on every rising edge of SCL in the order of D7, D6, ... D0.
4. D/C=1 is shifted thru SDA with one rising edge of SCL
5. SDA is shifted out an 8-bit data on every falling edge of SCL in the order of D7, D6, … D0.
6. Depending on register type, more than 1 byte can be read out. After all byte are read, CS# need to drive to high to stop the read operation.

Figure 6-4: Read procedure in 3-wire SPI mode

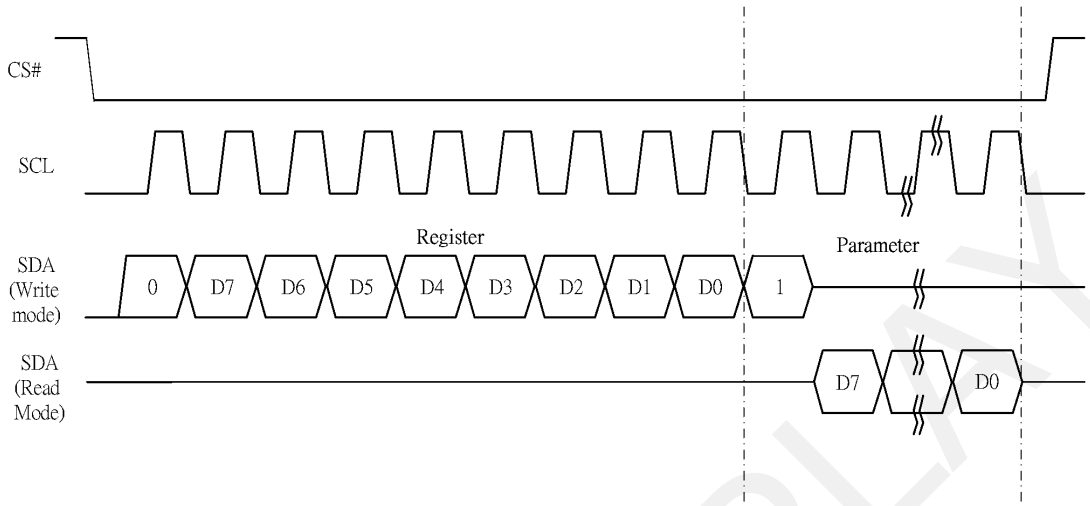

6.4.4 Interface Timing

The following specifications apply for: VSS=0V, VCI=3.0V, TOPR =25ºC.

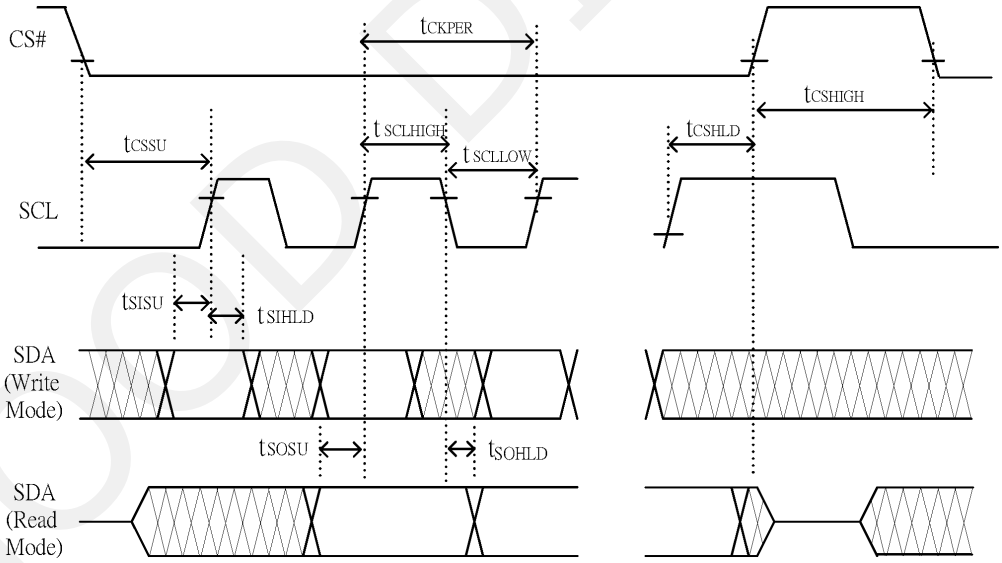

Changed Diagram

Serial Interface Timing Characteristics

(VCI - VSS = 2.2V to 3.7V, TOPR = 25°C, CL=20pF)

Write mode

Symbol	Parameter	Min	Typ.	Max	Unit
fSCL	SCL frequency (Write Mode)			20	MHz
tCSSU	Time CS# has to be low before the first rising edge of SCLK	60			ns
tCSHLD	Time CS# has to remain low after the last falling edge of SCLK	65			ns
tCSHIGH	Time CS# has to remain high between two transfers	100			ns
tSCLHIGH	Part of the clock period where SCL has to remain high	25			ns
tSCLLOW	Part of the clock period where SCL has to remain low	25			ns
tSISU	Time SI (SDA Write Mode) has to be stable before the next rising edge of SCL	10			ns
tSIHLD	Time SI (SDA Write Mode) has to remain stable after the rising edge of SCL	40			ns

Read mode

Symbol	Parameter	Min	Typ.	Max	Unit
fSCL	SCL frequency (Read Mode)			2.5	MHz
tCSSU	Time CS# has to be low before the first rising edge of SCLK	100			ns
tCSHLD	Time CS# has to remain low after the last falling edge of SCLK	50			ns
tCSHIGH	Time CS# has to remain high between two transfers	250			ns
tSCLHIGH	Part of the clock period where SCL has to remain high	180			ns
tSCLLOW	Part of the clock period where SCL has to remain low	180			ns
tSOSU	Time SO(SDA Read Mode) will be stable before the next rising edge of SCL		50		ns
tSOHLD	Time SO (SDA Read Mode) will remain stable after the falling edge of SCL		0		ns

7.Command Table

R/W#	D/C#	Hex	D7	D6	D5	D4	D3	D2	D1	D0	Command	Description
0	0	01	0	0	0	0	0	0	0	1	Driver Output control	Gate setting Set A[8:0]=0127h Set B[8:0]=00h
0	1		A7	A6	A5	A4	A3	A2	A1	A0		
0	1		0	0	0	0	0	0	0	A8		
0	1		0	0	0	0	0	B2	B1	B0		
0	0	03	0	0	0	0	0	0	1	1	Gate Driving voltage control	Set Gate Driving voltage A[4:0]=17h[POR],VGH at 20V[POR] VGH setting from 10V to 20V
0	1		0	0	0	A4	A3	A2	A1	A0		
0	0	04	0	0	0	0	0	1	0	0	Source Driving voltage control	Set Source Driving voltage A[7:0]= 41h[POR],VSH1 at 15V B[7:0]=A Ch[POR],VSH2 at 5.4V C[7:0]= 32h[POR], VSL at -15V
0	1		A7	A6	A5	A4	A3	A2	A1	A0		
0	1		B7	B6	B5	B4	B3	B2	B1	B0		
0	1		C7	C6	C5	C4	C3	C2	C1	C0		
0	0	08	0	0	0	0	1	0	0	0	Initial Code Setting OTP Program	Program Initial Code Setting The command required CLKEN=1. Refer to Register 0x22 for detail. BUSY pad will output high during operation
0	0	09	0	0	0	0	1	0	0	1	Write Register for Initial Code Setting	Write Register for Initial Code Setting Selection A[7:0] ~ D[7:0]: Reserved Details refer to Application Notes of Initial Code Setting
0	1		A7	A6	A5	A4	A3	A2	A1	A0		
0	1		B7	B6	B5	B4	B3	B2	B1	B0		
0	1		C7	C6	C5	C4	C3	C2	C1	C0		
0	1		D7	D6	D5	D4	D3	D2	D1	D0		
0	0	0A	0	0	0	0	1	0	1	0	Read Register for Initial Code Setting	Read Register for Initial Code Setting
0	0	10	0	0	0	1	0	0	0	0	Deep Sleep mode	Deep Sleep mode Control: A[1:0] : Description 00 Normal Mode [POR] 01 Enter Deep Sleep Mode 1 11 Enter Deep Sleep Mode 2 After this command initiated, the chip will enter Deep Sleep Mode, BUSY pad will keep output high. Remark: To Exit Deep Sleep mode, User required to send HWRESET to the driver
0	1		0	0	0	0	0	0	0	A_0		
0	1		0	0	0	0	0	A_2	A_1	A_0		
0	1		1	A6	A5	A4	A3	A2	A1	A0		
0	1		1	B6	B5	B4	B3	B2	B1	B0		
0	1		1	C6	C5	C4	C3	C2	C1	C0		
0	1		0	0	D5	D4	D3	D2	D1	D0		

0	0	11	0	0	0	1	0	0	0	1	Data Entry mode setting	Define data entry sequence A[2:0] = 011 [POR] A [1:0] = ID[1:0] Address automatic increment / decrement setting The setting of incrementing or decrementing of the address counter can be made independently in each upper and lower bit of the address. 00 – Y decrement, X decrement, 01 – Y decrement, X increment, 10 – Y increment, X decrement, 11 – Y increment, X increment [POR] A[2] = AM Set the direction in which the address counter is updated automatically after data are written to the RAM. AM= 0, the address counter is updated in the X direction. [POR] AM = 1, the address counter is updated in the Y direction

0	0	0C	0	0	0	0	1	1	0	0	Booster Soft start Control	Booster Enable with Phase 1, Phase 2 and Phase 3 for soft start current and duration setting. A[7:0] -> Soft start setting for Phase1 = 8Bh [POR] B[7:0] -> Soft start setting for Phase2 = 9Ch [POR] C[7:0] -> Soft start setting for Phase3 = 96h [POR] D[7:0] -> Duration setting = 0Fh [POR] Bit Description of each byte: A[6:0] / B[6:0] / C[6:0]: Bit[6:4] Driving Strength Selection 000 1(Weakest) 001 2 010 3 011 4 100 5 101 6 110 7 111 8(Strongest) Bit[3:0] Min Off Time Setting of GDR [Time unit] 0000 ~ 0011 NA 0100 2.6 0101 3.2 0110 3.9 0111 4.6 1000 5.4 1001 6.3 1010 7.3 1011 8.4 1100 9.8 1101 11.5 1110 13.8 1111 16.5 D[5:0]: duration setting of phase D[5:4]: duration setting of phase 3 D[3:2]: duration setting of phase 2 D[1:0]: duration setting of phase 1 Bit[1:0] Duration of Phase [Approximation] 00 10ms 01 20ms 10 30ms 11 40ms

0	0	12	0	0	0	1	0	0	1	0	SWRESET	It resets the commands and parameters to their S/W Reset default values except R10h-Deep Sleep Mode During operation, BUSY pad will output high. Note: RAM are unaffected by this command.
0	0	18	0	0	0	1	1	0	0	0	Temperature Sensor Control	Temperature Sensor Selection A[7:0] = 48h [POR], external temperature sensor A[7:0] = 80h Internal temperature sensor
0	1		A7	A6	A5	A4	A3	A2	A1	A0		
0	0	1A	0	0	0	1	1	0	1	0	Temperature Sensor Control (Write to temperature register)l	Write to temperature register. A[11:0] = 7FFh [POR]
0	1		A7	A6	A5	A4	A3	A2	A1	A0		
0	1		B7	B6	B5	B4	0	0	0	0		
0	0	20	0	0	1	0	0	0	0	0	Master Activation	Activate Display Update Sequence The Display Update Sequence Option is located at R22h User should not interrupt this operation to avoid corruption of panel images.
0	0	21	0	0	1	0	0	0	0	1	Display Update Control 1	RAM content option for Display Update A[7:0] = 00h [POR] B[7:0] = 00h [POR] A[7:4] Red RAM option 0000 Normal 0100 Bypass RAM content as 0 1000 Inverse RAM content A[3:0] BW RAM option 0000 Normal 0100 Bypass RAM content as 0 1000 Inverse RAM content B[7] Source Output Mode 0 Available Source from S0 to S175 1 Available Source from S8 to S167
0	1		A7	A6	A5	A4	A3	A2	A1	A0		
0	1		B7	0	0	0	0	0	0	0		

0	0	22	0	0	1	0	0	0	1	0	Display Update Control 2	Display Update Sequence Option: Enable the stage for Master Activation A[7:0]= FFh (POR) Operating sequence Parameter (in Hex) Enable clock signal 80 Disable clock signal 01 Enable clock signal Enable Analog C0 Disable Analog Disable clock signal 03 Enable clock signal Load LUT with DISPLAY Mode 1 Disable clock signal 91 Enable clock signal Load LUT with DISPLAY Mode 2 Disable clock signal 99 Enable clock signal Load temperature value Load LUT with DISPLAY Mode 1 Disable clock signal B1 Enable clock signal Load temperature value Load LUT with DISPLAY Mode 2 Disable clock signal B9 Enable clock signal Enable Analog Display with DISPLAY Mode 1 Disable Analog Disable OSC C7 Enable clock signal Enable Analog Display with DISPLAY Mode 2 Disable Analog Disable OSC CF Enable clock signal Enable Analog Load temperature value DISPLAY with DISPLAY Mode 1 Disable Analog Disable OSC F7 Enable clock signal Enable Analog Load temperature value DISPLAY with DISPLAY Mode 2
0	1		A7	A6	A5	A4	A3	A2	A1	A0		

0	0	24	0	0	1	0	0	1	0	0	Write RAM (Black White) / RAM 0x24	After this command, data entries will be written into the BW RAM until another command is written. Address pointers will advance accordingly For Write pixel: Content of Write RAM(BW) = 1 For Black pixel: Content of Write RAM(BW) = 0
0	0	26	0	0	1	0	0	1	1	0	Write RAM (RED) / RAM 0x26)	After this command, data entries will be written into the RED RAM until another command is written. Address pointers will advance accordingly. For Red pixel: Content of Write RAM(RED) = 1 For non-Red pixel [Black or White]: Content of Write RAM(RED) = 0
0	0	2C	0	0	1	0	1	1	0	0	Write VCOM register	Write VCOM register from MCU interface A[7:0] = 00h [POR]
0	1		A7	A6	A5	A4	A3	A2	A1	A0		
0	0	2D	0	0	1	0	1	1	0	1	OTP Register Read for Display Option	Read Register for Display Option: A[7:0]: VCOM OTP Selection (Command 0x37, Byte A) B[7:0]: VCOM Register (Command 0x2C) C[7:0]~G[7:0]: Display Mode (Command 0x37, Byte B to Byte F) [5 bytes] H[7:0]~K[7:0]: Waveform Version (Command 0x37, Byte G to Byte J) [4 bytes]
1	1		A7	A6	A5	A4	A3	A2	A1	A0		
1	1		B7	B6	B5	B4	B3	B2	B1	B0		
1	1		C7	C6	C5	C4	C3	C2	C1	C0		
1	1		D7	D6	D5	D4	D3	D2	D1	D0		
1	1		E7	E6	E5	E4	E3	E2	E1	E0		
1	1		F7	F6	F5	F4	F3	F2	F1	F0		
1	1		G7	G6	G5	G4	G3	G2	G1	G0		
1	1		H7	H6	H5	H4	H3	H2	H1	H0		
1	1		I7	I6	I5	I4	I3	I2	I1	I0		
1	1		J7	J6	J5	J4	J3	J2	J1	J0		
1	1		K7	K6	K5	K4	K3	K2	K1	K0		

0	0	2F	0	0	1	0	1	1	1	1	Status Bit Read	Read IC status Bit [POR 0x01] A[5]: HV Ready Detection flag [POR=0] 0: Ready 1: Not Ready A[4]: VCI Detection flag [POR=0] 0: Normal 1: VCI lower than the Detect level A[3]: [POR=0] A[2]: Busy flag [POR=0] 0: Normal 1: BUSY A[1:0]: Chip ID [POR=01] Remark: A[5] and A[4] status are not valid after RESET, they need to be initiated by command 0x14 and command 0x15 respectively
0	0	30	0	0	1	1	0	0	0	0	Program WS OTP	Program OTP of Waveform Setting The contents should be written into RAM before sending this command. The command required CLKEN=1. Refer to Register 0x22 for detail. BUSY pad will output high during operation
0	0	32	0	0	1	1	0	0	1	0	Write LUT register	Write LUT register from MCU interface [153 bytes], which contains the content of VS[nX-LUTm], TP[nX], RP[n], SR[nXY], FR[n] and XON[nXY] Refer to Session 6.7 WAVEFORM SETTING
0	1		A7	A6	A5	A4	A3	A2	A1	A0		
0	1		B7	B6	B5	B4	B3	B2	B1	B0		
0	1		:	:	:	:	:	:	:	:		
0	1		:	:	:	:	:	:	:	:		
0	1		:	:	:	:	:	:	:	:		
0	1		:	:	:	:	:	:	:	:		
0	0	39	0	0	1	1	1	0	0	1	OTP program mode	OTP program mode A[1:0] = 00: Normal Mode [POR] A[1:0] = 11: Internal generated OTP programming voltage Remark: User is required to EXACTLY follow the reference code sequences

0	0	3C	0	0	1	1	1	1	0	0		Select border waveform for VBD A[7:0] = C0h [POR], set VBD as HIZ. A [7:6] :Select VBD option A[7:6] Select VBD as 00 GS Transition, Defined in A[2] and A[1:0] 01 Fix Level, Defined in A[5:4] 10 VCOM 11[POR] HiZ A [5:4] Fix Level Setting for VBD A[5:4] VBD level 00 VSS 01 VSH1 10 VSL 11 VSH2 A[2] GS Transition control A[2] GS Transition control 0 Follow LUT (Output VCOM @ RED) 1 Follow LUT A [1:0] GS Transition setting for VBD A[1:0] VBD Transition 00 LUT0 01 LUT1 10 LUT2 11 LUT3
0	1		A_7	A_6	A_5	A_4	0	0	A_1	A_0		
0	0	44	0	1	0	0	0	1	0	0	Set RAM X - address Start / End position	Specify the start/end positions of the window address in the X direction by an address unit A[4:0]: XSA[4:0], X Start, POR = 00h B[4:0]: XEA[4:0], X End, POR = 14h
0	1		0	0	0	A_4	A_3	A_2	A_1	A_0		
0	1		0	0	0	B_4	B_3	B_2	B_1	B_0		
0	0	45	0	1	0	0	0	1	0	1	Set Ram Y- address Start / End position	Specify the start/end positions of the window address in the Y direction by an address unit A[8:0]: YSA[8:0], Y Start, POR = 0127h B[8:0]: YEA[8:0], Y End, POR = 0000h
0	1		A_7	A_6	A_5	A_4	A_3	A_2	A_1	A_0		
0	1		0	0	0	0	0	0	0	A_8		
0	1		B_7	B_6	B_5	B_4	B_3	B_2	B_1	B_0		
0	1		0	0	0	0	0	0	0	B_8		
0	0	4E	0	1	0	0	1	1	1	0	Set RAM X address counter	Make initial settings for the RAM X address in the address counter (AC) A[4:0]: XAD[4:0], POR is 00h
0	1		0	0	0	A_4	A_3	A_2	A_1	A_0		
0	0	4F	0	1	0	0	1	1	1	1	Set RAM Y address counter	Make initial settings for the RAM Y address in the address counter (AC) A[8:0]: YAD[8:0], POR is 0127h
0	1		A_7	A_6	A_5	A_4	A_3	A_2	A_1	A_0		
0	1		0	0	0	0	0	0	0	A_8		

8. Optical Specification

Measurements are made with that the illumination is under an angle of 45 degree, the detection is perpendicular unless otherwise specified

Symbol	Parameter	Conditions	Min	Typ.	Max	Units	Notes
R	White Reflectivity	White	30	35	-	%	8-1
CR	Contrast Ratio	indoor	8:1		-		8-2
GN	2Grey Level	-	-				
T update	Image update time	at 25 °C	-	3	-	sec	
Life		23±3℃ 55±10%RH		5years			8-3

Notes:

8-1. Luminance meter: Eye-One Pro Spectrophotometer.

8-2. CR=Surface Reflectance with all white pixel/Surface Reflectance with all black pixels.

8-3 When the product is stored. The display screen should be kept white and face up.

9. Handling Safety and Environment Re uirements

Warning

The display glass may break when it is dropped or bumped on a hard surface. Handle with care. Should the display break, do not touch the electrophoretic material. In case of contact with electrophoretic material, wash with water and soap.

Caution

The display module should not be exposed to harmful gases, such as acid and alkali gases, which corrode electronic components. Disassembling the display module.
Disassembling the display module can cause permanent damage and invalidates the warranty agreements.
Observe general precautions that are common to handling delicate electronic components. The glass can break and front surfaces can easily be damaged. Moreover the display is sensitive to static electricity and other rough environmental conditions.

Data sheet status

Product specification: This data sheet contains final product specifications.

imiting values

Limiting values given are in accordance with the Absolute Maximum Rating System (IEC 134). Stress above one or more of the limiting values may cause permanent damage to the device. These are stress ratings only and operation of the device at these or at any other conditions above those given in the Characteristics sections of the specification is not implied. Exposure to limiting values for extended periods may affect device reliability.

Application information

Where application information is given, it is advisory and does not form part of the specification.

10. Reliability Test

NO	Test items	Test condition
1	Low-Temperature Storage	T = -25°C, 240 h Test in white pattern
2	High-Temperature Storage	T = +70°C, RH=40% ,240h Test in white pattern
3	High-Temperature Operation	T = +50°C, RH = 30% ,240h
4	Low-Temperature Operation	0ºC，240h
5	High-Temperature, High-Humidity Operation	T=+40ºC，RH=90%,240h
6	High Temperature, High Humidity Storage	T=+60ºC，RH=80%,240h Test in white pattern
7	Temperature Cycle	1 cycle:[-25°C 30min]→[+70 °C 30 min] : 100 cycles Test in white pattern
8	UV exposure Resistance	765W/m² for 168hrs,40 °C Test in white pattern
9	ESD Gun	Air+/-15KV;Contact+/-8KV (Test finished product shell, not display only) Air+/-8KV;Contact+/-6KV (Naked EPD display, no including IC and FPC area) Air+/-4KV;Contact+/-2KV (Naked EPD display, including IC and FPC area)

Note: Put in normal temperature for 1hour after test finished, display performance is ok.

11. Block Diagram

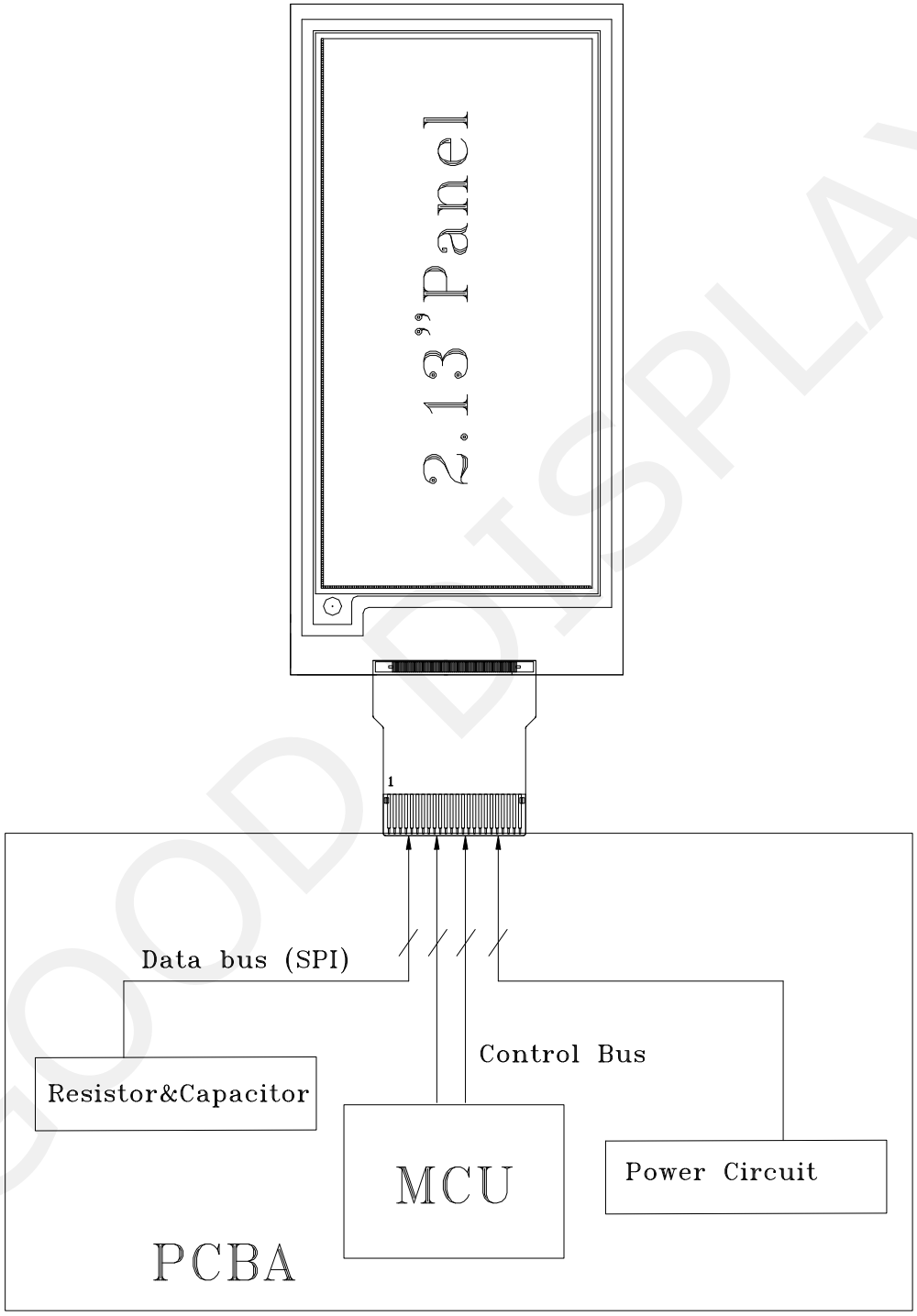

12. Typical Application Circuit with SPI Interface

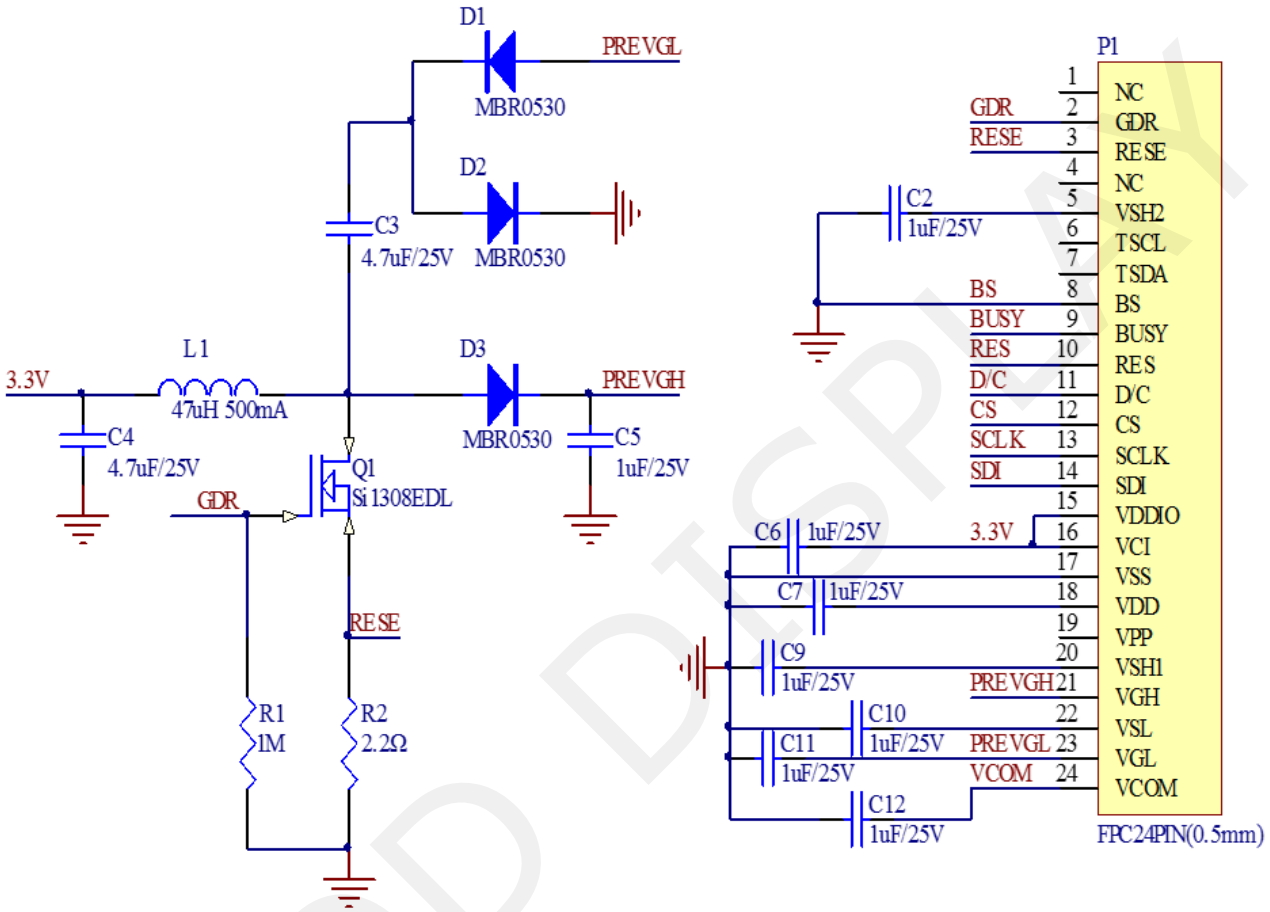

13. Matched Development Kit

Our Development Kit designed for SPI E-paper Display aims to help users to learn how to use E-paper Display more easily. It can refresh black-white E-paper Display and three-color (black, white and red/Yellow) Good Display 's E-paper Display. And it is also added the functions of USB serial port, Raspberry Pi and LED indicator light ect.
DESPI Development Kit consists of the development board and the pinboard.

More details about the Development Kit, please click to the following link:

http://www.good-display.com/companyfile/Development-Board-8

14 Typical Operating Sequence

14.1 OTP Operation Flow

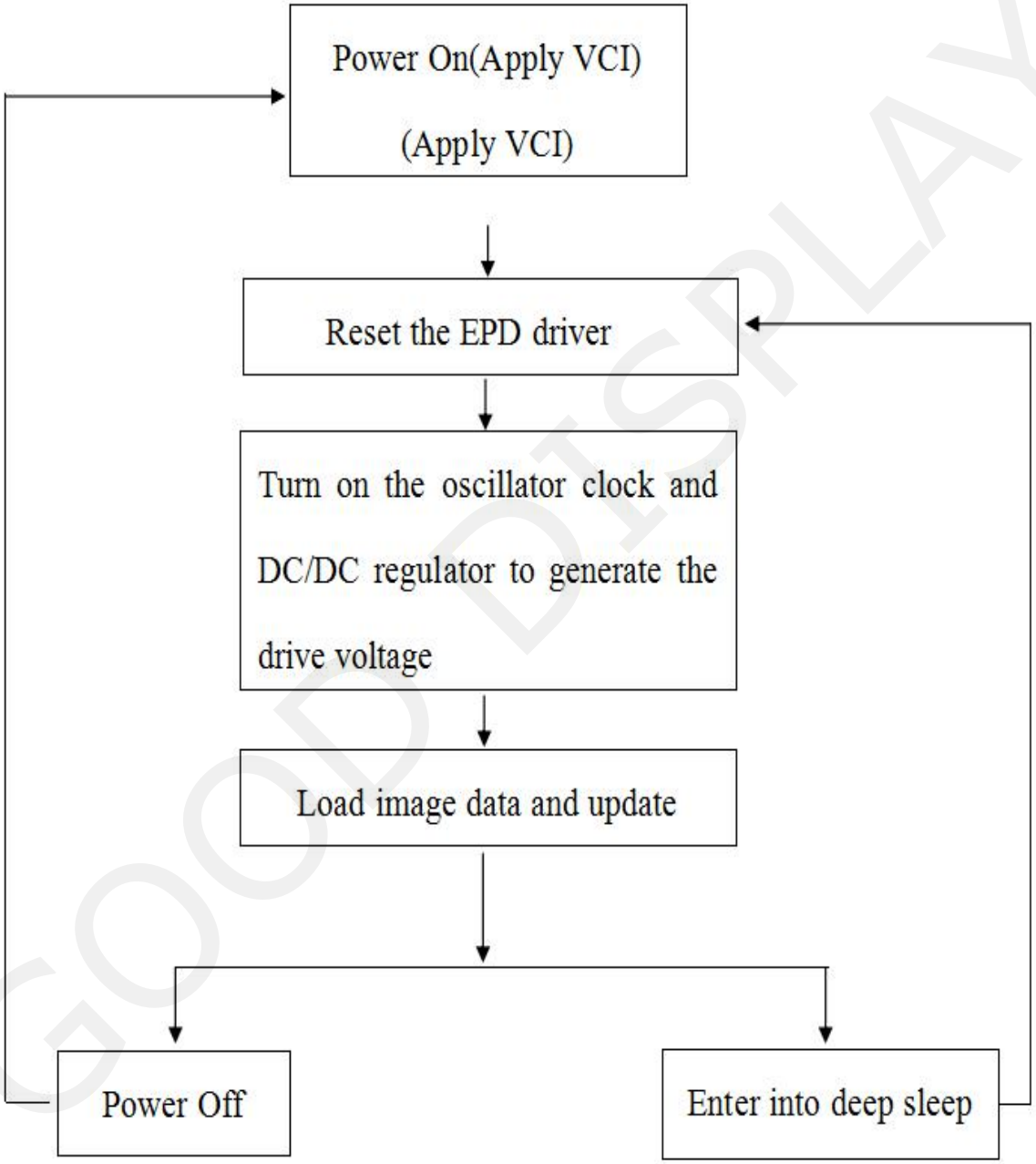

14.2 OTP Operation Reference Program Code

ACTION	VALUE/DATA	COMMENT
POWER ON		
delay	10ms	
PIN CONFIG		
RESE#	low	Hardware reset
delay	200us	
RESE#	high	
delay	200us	
Read busy pin		Wait for busy low
Command 0x12		Software reset
Read busy pin		Wait for busy low
SET VOLTAGE AND LOAD LUT		
LOAD IMAGE AND UPDATE		
Command 0x24	4000bytes	Load image (128/8*250)(BW)
Command 0x20		
Read busy pin		Wait for busy low
Command 0x10	Data 0X01	Enter deep sleep mode
POWER OFF		

15. Inspection condition

15.1 Environment

Temperature: 23±3℃ Humidity: 55±10%RH

15.2 Illuminance

Brightness:1200～1500LUX;distance:20-30CM;Angle:Relate 45°surround.

15.3 Inspect method

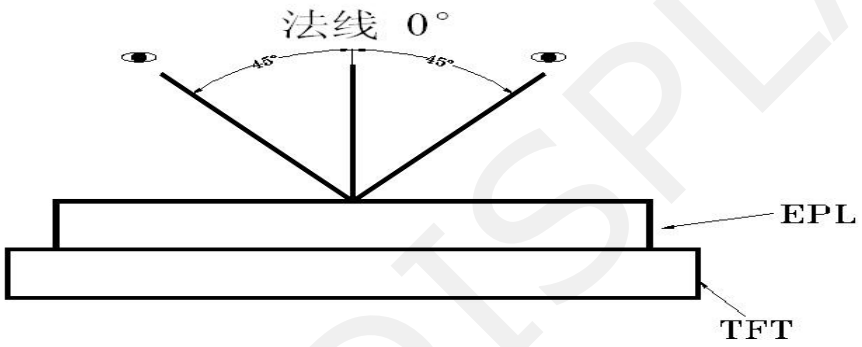

15.4 Display area

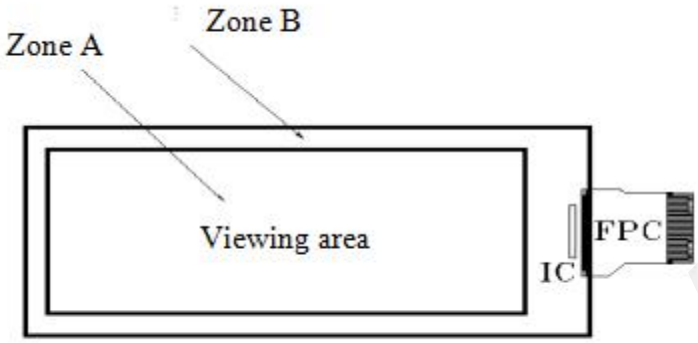

15.5 Inspection standard

15.5.1 Electric inspection standard

NO.	Item	Standard	Defect level	Method	Scope
1	Dispay	Display complete Display uniform	MA	Visual inspection	Zone A
2	Black/White spots	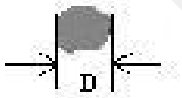 D≤0.25mm，Allowed 0.25mm＜D≤0.4mm。N≤4， and Distance≥5mm 0.4mm＜D Not Allow	MI		
3	Black/White spots (No switch)	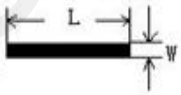 L≤0.4mm，W≤0.1mm negligible 0.4mm＜L≤1.0mm 0.1mm＜W≤0.4mm N≤4 allowable L>1.0mm,W＞0.4mm，Not Allow		Visual/ Inspection card	
4	Ghost image	Allowed in switching process	MI	Visual inspection	

5	Flash spots/ Larger FPL size	Flash spots in switching, Allowed FPL size larger than viewing area, Allowed	MI	Visual/ Inspection card	Zone A Zone B
6	Display wrong/Missing	All appointed displays are showed correct	MA	Visual inspection	Zone A
7	Short circuit/ Circuit break/ Display abnormal	Not Allow			

15.5.2 Appearance inspection standard

NO.	Item	Standard	Defect level	Method	Scope
1	B/W spots /Bubble/ Foreign bodies/ Dents	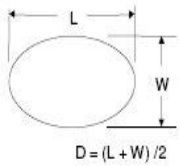 D≤0.25mm，negligible 0.25mmD≤0.4mm，N≤4 Allowed D＞0.4mm，Not Allow	MI	Visual inspection	Zone A
2	Glass crack	Not Allow	MA	Visual / Microscope	Zone A Zone B
3	Dirty	Allowed if can be removed	MI		Zone A Zone B
4	Chips/Scratch/ Edge crown	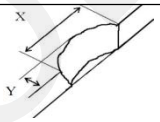 X≤3mm,Y≤0.5mmAnd without affecting the electrode is permissible 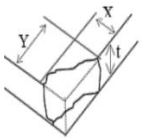 2mm≤X or 2mm≤Y Not Allow 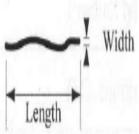 W≤0.1mm,L≤5mm, No harm to the electrodes and N≤2 allow	MI	Visual / Microscope	Zone A Zone B

5	TFT Cracks	 Not Allow	MA	Visual / Microscope	Zone A Zone B
6	Dirty/ foreign body	Allowed if can be removed/ allow	MI	Visual / Microscope	Zone A / Zone B
7	FPC broken/ Goldfingers xidation/ scratch	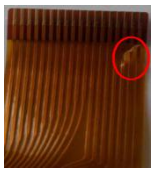  Not Allow	MA	Visual / Microscope	Zone B
8	TFT edge bulge /TFT chromatic aberration	TFT edge bulge： X≤3mm，Y≤0.3mm Allowed TFT chromatic aberration :Allowed	MI	Visual / Microscope	Zone A Zone B
9	PCB damaged/ Poor welding/ Curl	PCB（Circuit area）damaged Not Allow PCB Poor welding Not Allow PCB Curl≤1%	MI	Visual / Ruler	Zone B
10	Edge glue height/ Edge glue bubble	Edge Adhesives H≤PS surface (Including protect film) Edge adhesives seep in≤1/2 Margin width Length excluding Edge adhesives bubble：bubble Width ≤1/2 Margin width；Length ≤5.0mm。n≤5			
11	Protect film	Surface scratch but not effect protect function, Allowed		Visual Inspection	
12	Silicon glue	Thickness≤PS surface(With protect film): Full cover the IC; Shape: The width on the FPC ≤ 0.5mm (Front) The width on the FPC≤1.0mm (Back) smooth surface,No obvious raised.	MI	Visual Inspection	
13	Warp degree (TFT substrate)	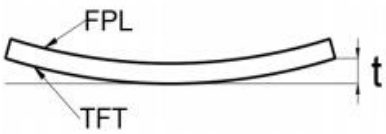 t≤1.0mm	MI	Ruler	
14	Color difference in COM area (Silver point area)	Allowed		Visual Inspection	

16. Packing

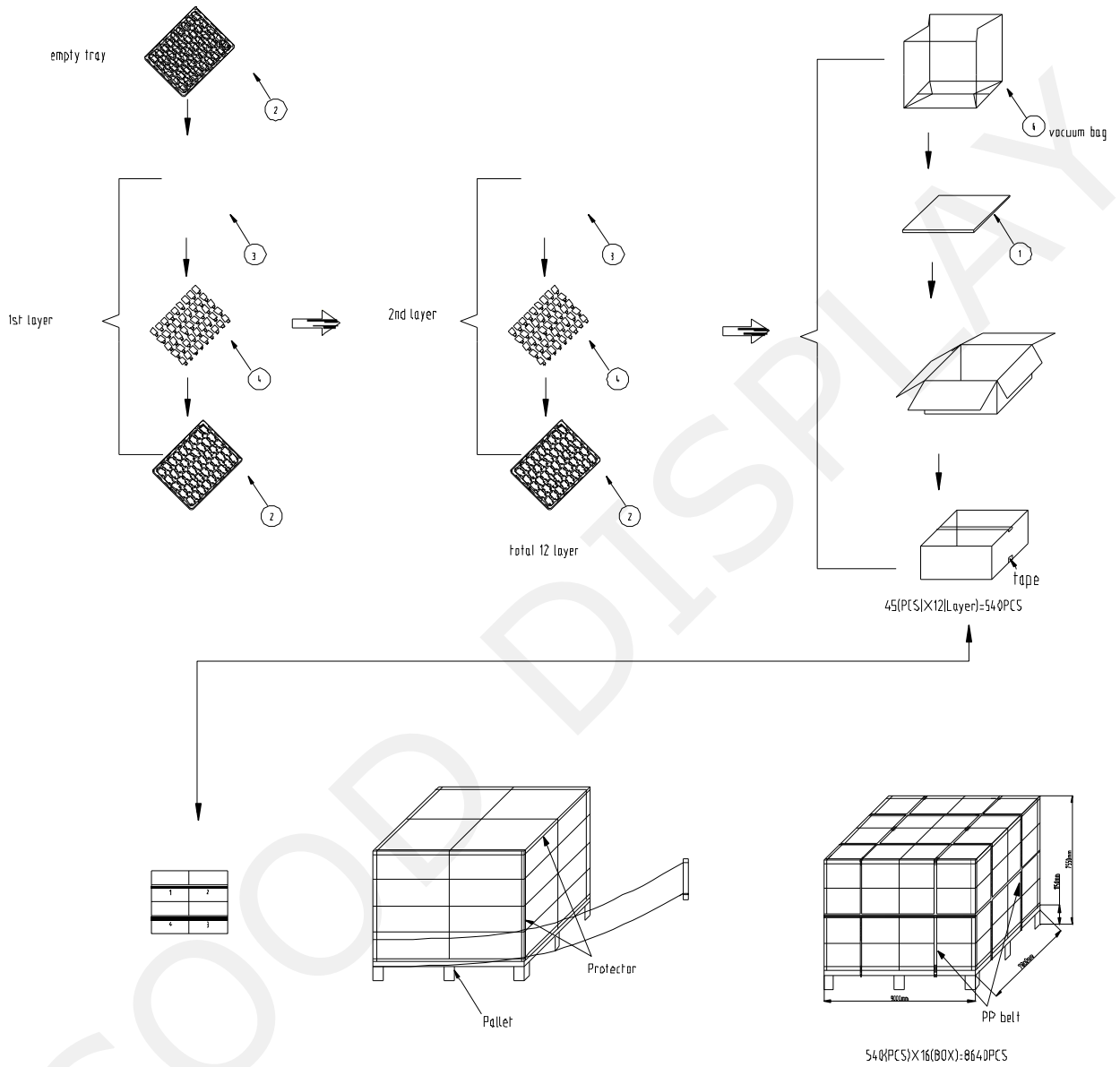

17. Precautions

(1) Do not apply pressure to the EPD panel in order to prevent damaging it.

(2) Do not connect or disconnect the interface connector while the EPD panel is in operation.

(3) Do not touch IC bonding area. It may scratch TFT lead or damage IC function.

(4) Please be mindful of moisture to avoid its penetration into the EPD panel, which may cause damage during operation.

(5) If the EPD Panel / Module is not refreshed every 24 hours, a phenomena known as "Ghosting" or "Image Sticking" may occur. It is recommended to refreshed the ESL /EPD Tag every 24 hours in use case. It is recommended that customer ships or stores the ESL / EPD Tag with a completely white image to avoid this issue

(6) High temperature, high humidity, sunlight or fluorescent light may degrade the EPD panel's performance. Please do not expose the unprotected EPD panel to high temperature, high humidity, sunlight, or fluorescent for long periods of time.

(7) For more precautions, please click on the link:
http://www.good-display.com/news/Precautions-for-E-paper-Display-80.html