Class T Fuse Blocks 300V • 600V

RoHS c UL us E359089

Description

TheVicfuse Class T blocks offer many advantages such as space saving design, universal mounting holes, snap-to-release DIN rail mount and available covers.

Features/Benefits

- Space-saving design
- Universal mounting holes for easy replacement
- One hand release from DIN rail for 30-60A fuses
- Reinforced fuse clips are standard
- Covers available for most amperages to enhance safety

Specifications

Voltage Ratings: 300V AC/ 600V AC
Ampere Ratings:1-600A
Leakage Current:<0.6mA at 600V
Withstand Rating: 200kA RMS SYM
Flammability Rating: UL94 V-0
Apprpvals Environmental: RoHS Compliant, Lead (Pb) Free

Recommended Fuses

300V VTF
600V VTF

Ordering Information (Class T 300V);

AMP RATI--NG	ORDERING NUMBER							TORQUE	WIRE RANGE (AWG)	WIRE TYPE		BASW TEMP RATING	DIN RAIL MO--UNT	COVER ORDERING NUMBER*
	BASE ORDERING NUMBER	POLES			SUFFIX									
		1	2	3	BOX LUG	PRESSURE PLATE	SCR--EW							
30	VFT30030	1	2	3	C	-	-	2.8N-m(25IN-lbs) 5.6N-m(50in-lbs)	2-4 6-14	CU-AL	Solid/ Stranded	125℃	•	VFT30030FBC
60	VFT30060	1	2	3	C	-	-	5.6N-m(50in-lbs) 2.8N-m(25in-lbs)	2-4 6-14					VFT30060FBC
100	VFT30100	1	-	3	CS	-	-	13.6N-m(120in-lbs) 4.5N-m(40in-lbs) 4.0N-m(35in-lbs)	2/0-6 8 10-14			130℃	-	VFT30100FBC
200	VFT30200	1	-	3	CS	-	-	31.1N-m(275in-lbs)	250kcmil-6					-
400	VFT30400	1	-	3	CS	-	-	(2)31.1N-m(275in-lbs)	250kcmil-6					-
600	VFT30600	1	-	3	CS	-	-	(2)42.4N-m(375in-lbs)	500kcmil-4					-

Ordering Information (Class T 600V);

AMP RATI--NG	ORDERING NUMBER							TORQUE	WIRE RANGE (AWG)	WIRE TYPE		BASW TEMP RATING	DIN RAIL MO--UNT	COVER ORDERING NUMBER*
	BASE ORDERING NUMBER	POLES			SUFFIX									
		1	2	3	BOX LUG	PRESSURE PLATE	SCR--EW							
30	VFT60030	1	2	3	C	P	S	2.8N-m(25IN-lbs) 5.6N-m(50in-lbs)	2-4 6-14	** see note	Solid/ Stranded	125℃	•	VFT60030FBC
60	VFT60060	1	2	3	C	-	-	5.6N-m(50in-lbs) 2.8N-m(25in-lbs)	2-4 6-14					VFT60060FBC
100	VFT60100	1	-	3	CS	-	-	13.6N-m(120in-lbs) 4.5N-m(40in-lbs) 4.0N-m(35in-lbs)	2/0-6 8 10-14	CU-AL		130℃	-	VFT60100FBC
200	VFT60200	1	-	3	CS	-	-	31.1N-m(275in-lbs)	250kcmil-6					VFT60200FBC
400	VFT60400	1	-	3	CS	-	-	(2)31.1N-m(275in-lbs)	250kcmil-6					VFT60400FBC
600	VFT60600	1	-	3	CS	-	-	(2)42.4N-m(375in-lbs)	500kcmil-4					VFT60600FBC

*Covers sold individually. One cover needed for each pole.

**Wire Type for Pressure and Screw Terminal is CU only

Dimensions mm;

300V 30A

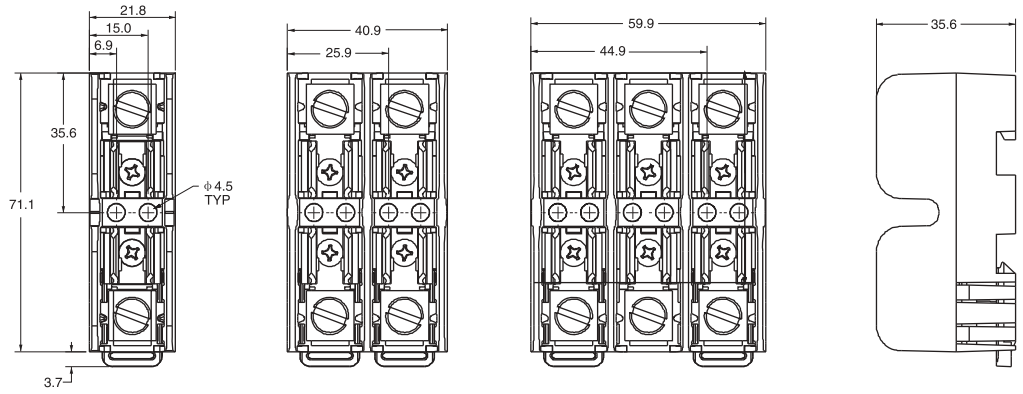

300V 60A

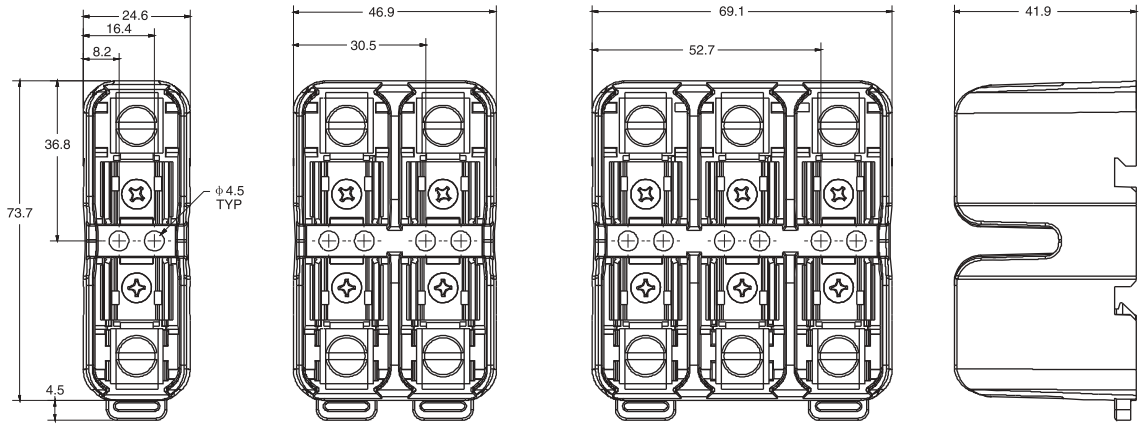

300V 100A

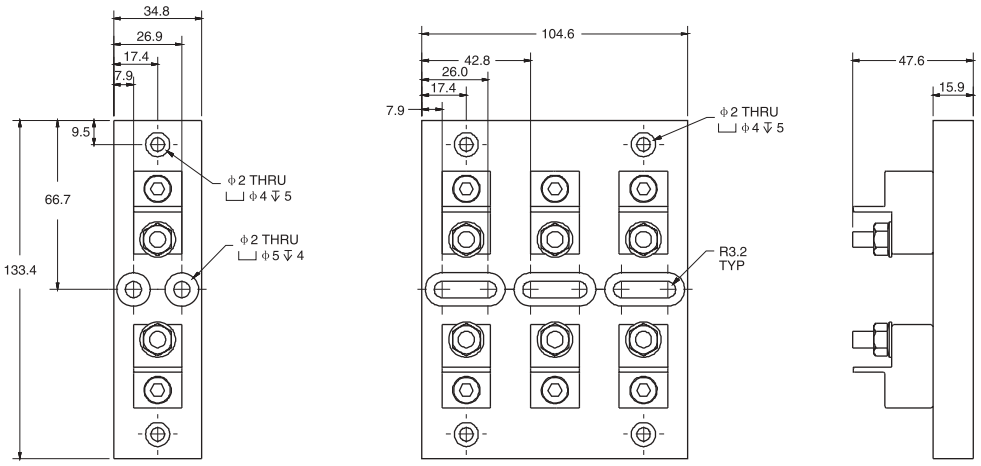

Dimensions mm;

300V 200A

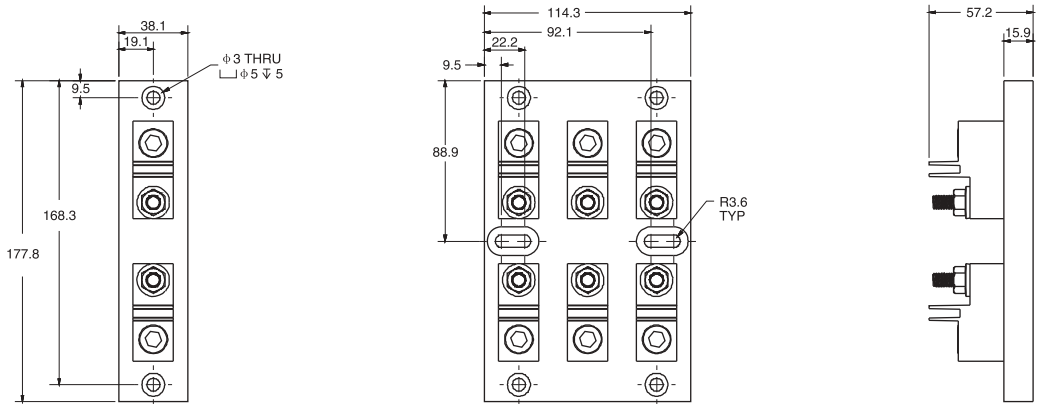

300V 400A

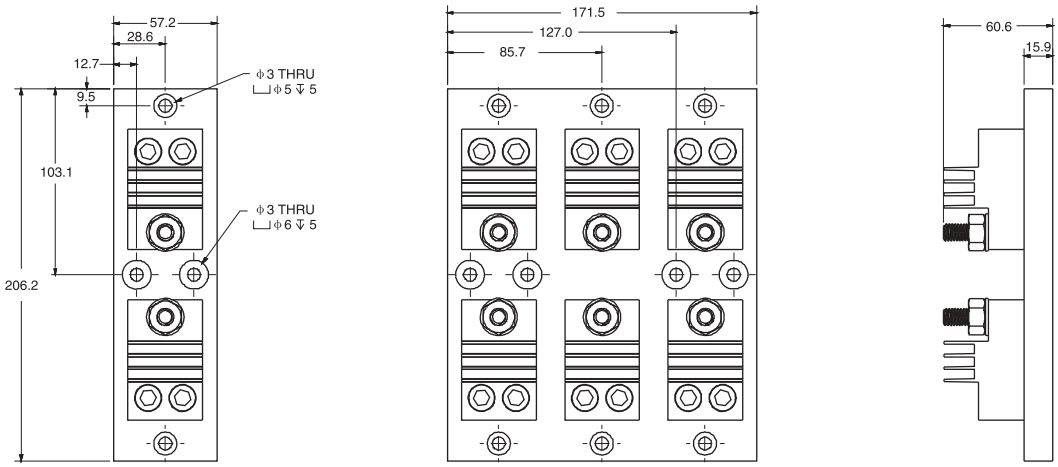

300V 600A

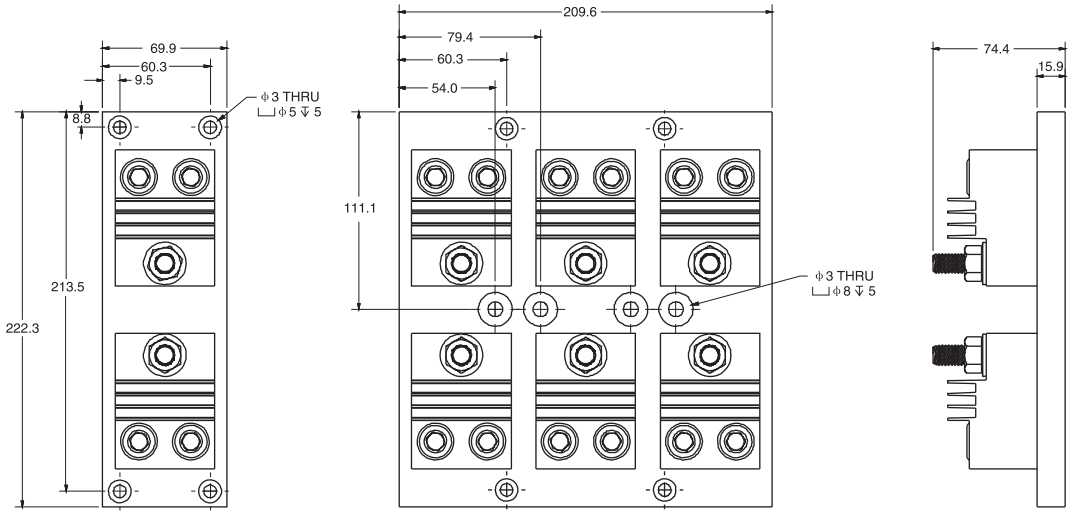

Dimensions mm;

600V 30A

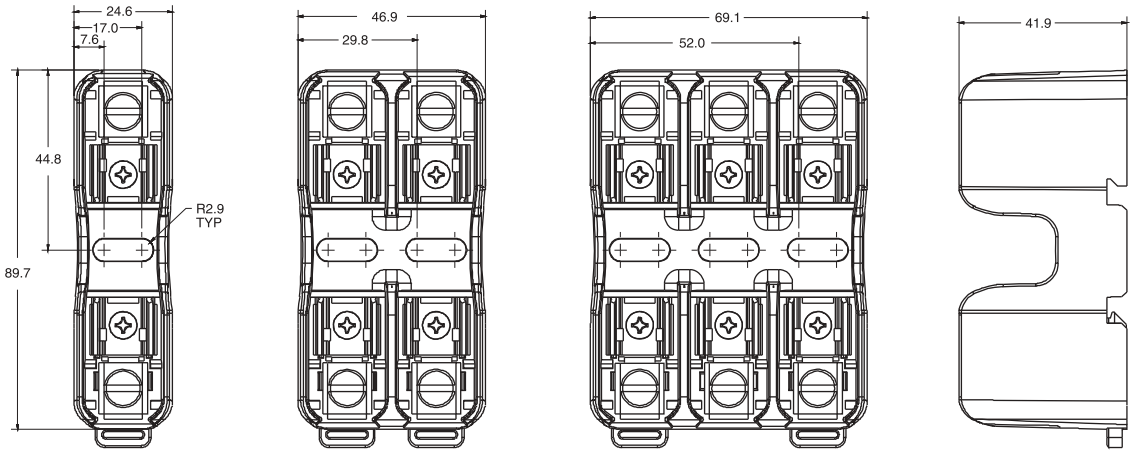

600V 60A

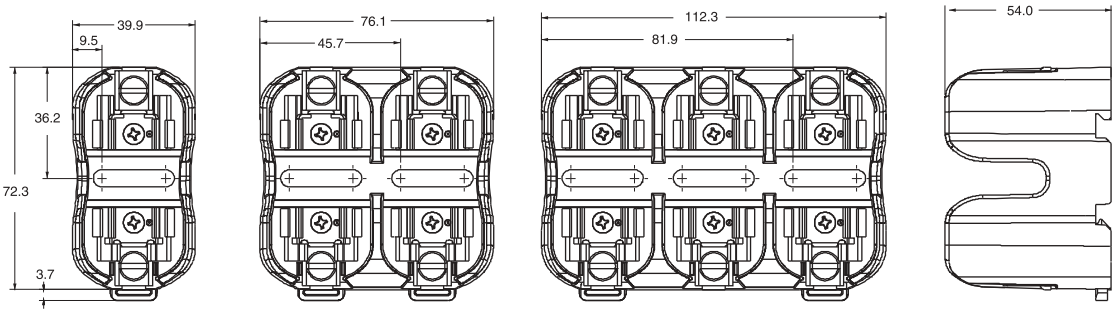

600V 100A

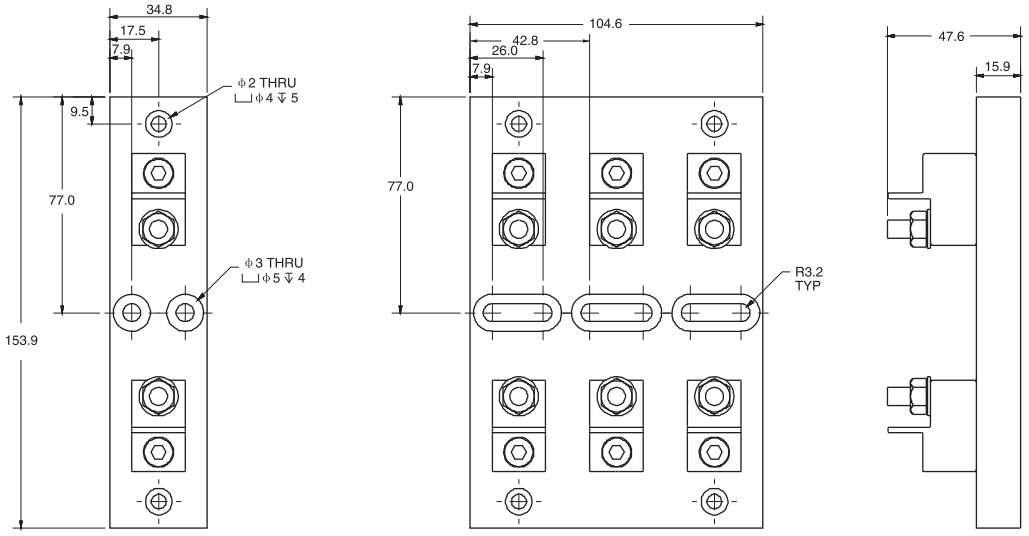

● **Dimensions mm;**

600V 200A

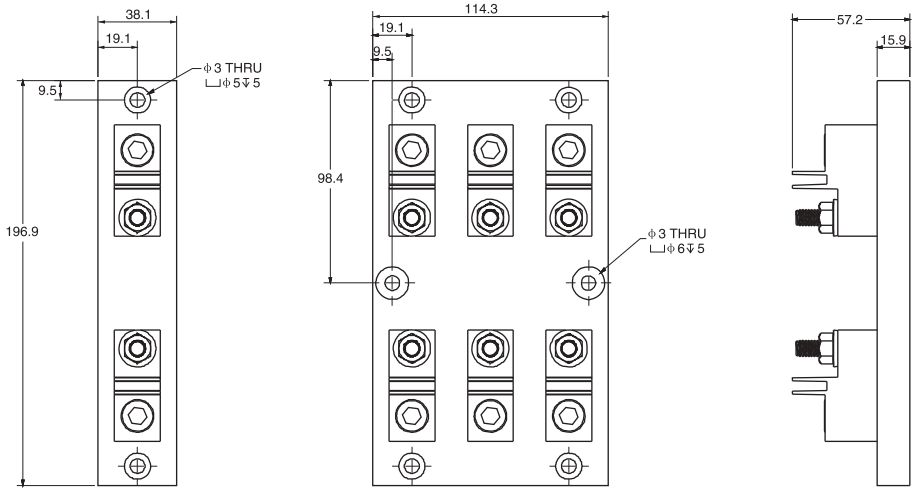

600V 400A

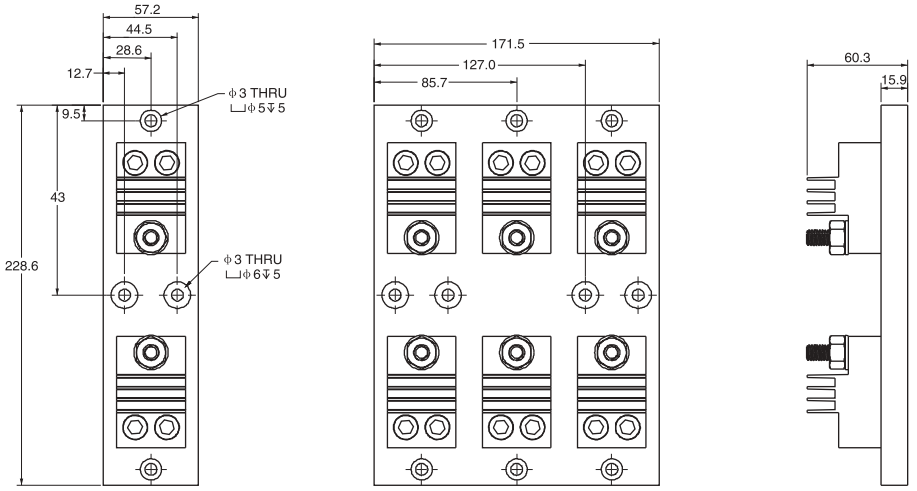
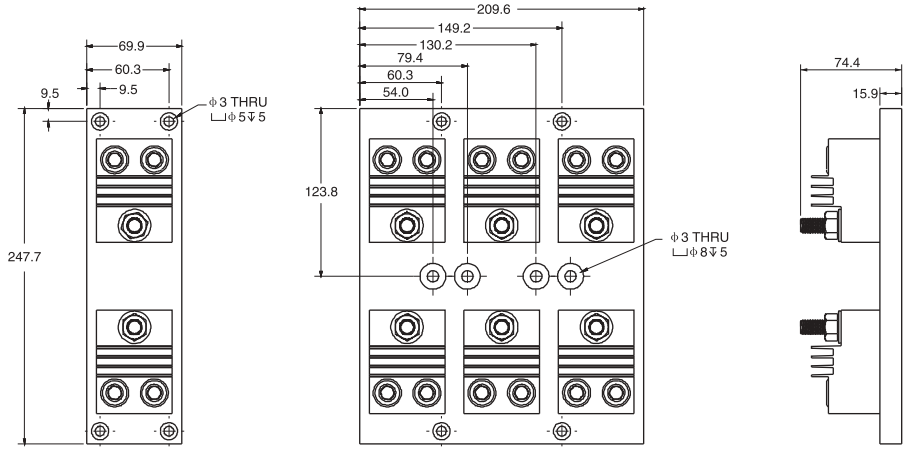
600V 600A